LIVE LINE
TECHNOLOGY

DISTRIBUTION LINE SURGE PROTECTION PRODUCTS

3kV-36kV

30 SECOND REPLACEMENT

HOT STICK OPERATED

REPLACE FROM THE GROUND

ZERO OUTAGE

NO CONNECTION WITHOUT THE SURGE PROTECTION

TRANSFORMER & LINE SURGE PROTECTION

LIVE LINE
TECHNOLOGY

Table of Contents

United States Patent

The United States of America

The Director of the United States Patent and Trademark Office

Has received an application for a patent for a new and useful invention. The title and description of the invention are enclosed. The requirements of law have been complied with, and it has been determined that a patent on the invention shall be granted under the law.

Therefore, this

United States Patent

Grants to the person(s) having title to this patent the right to exclude others from making, using, offering for sale, or selling the invention throughout the United States of America or importing the invention into the United States of America, and if the invention is a process, of the right to exclude others from using, offering for sale or selling throughout the United States of America, or importing into the United States of America, products made by that process, for the term set forth in 35 U.S.C. 154(a)(2) or (c)(1), subject to the payment of maintenance fees as provided by 35 U.S.C. 41(b). See the Maintenance Fee Notice on the inside of the cover.

David J. Kappos

Director of the United States Patent and Trademark Office

OAPI Patent

Organisation Africaine de la Propriété Intellectuelle

OAPI

African Intellectual Property Organization

DEMANDE D'ENREGISTREMENT D'UN DESSIN OU MODELE INDUSTRIEL

(Remplir électroniquement ce formulaire, sans rature ni surcharge)

Le (la) soussigné (e) dépose la présente demande conformément à l'annexe IV de l'Accord de Bangui DM401

Cadre réservé à l'Administration Nationale	Cadre réservé à l'OAPI
PV n° :	Date de dépôt 01 FEV 2018
du	N° de dépôt: 420180004 2
fait à	Date de réception: 01 FEV 2018
Pays :	Visa GUICHET UNIQUE O.A.P.I.
Visa	

I Déposant(s) ☐ Personne(s) physique(s) [X] Personne(s) morale(s)

Dénomination(s) sociale(s) / Nom(s) et prénom(s)

THE TRUSTEES FOR THE TIME BEING OF THE LIVE LINE INTERNATIONAL TRUST

Adresse(s):	Nationalité (Nom du pays)
Acclaim House, 12 Mount Havelock, DOUGLAS IM1 2QG Pays : Isle of Man	Isle of Man

N° Téléphone :	N° Fax :	e-mail :

II Auteur(s)

Nom(s) et adresse(s)

Kevin Philip RISI
72 Flora Avenue, Adamayview, KLERKSDORP
2570, North West Province
South Africa

Tél : Fax : e-mail

III Mandataire

Dénomination sociale / Nom(s) et prénom(s) S.C.P AKKUM, AKKUM & Associates

Adresse : Quartier Mballa II, Dragages, B.P 4966 Yaoundé, Cameroon

Tél. : (237) 222 21 80 43 Fax : (237) 222 21 80 44 e-mail : akkumlaw@yahoo.co.uk

CE FORMULAIRE EST OFFERT PAR L'OAPI ET NE PEUT ETRE VENDU

B.P. 887 Yaoundé Cameroun Tél. (237) 222 20 57 00 Fax (237) 222 20 57 27 Email: oapi@oapi.int www.oapi.int

ARIPO Patent

AFRICAN REGIONAL INTELLECTUAL PROPERTY ORGANIZATION (ARIPO)

Certificate

OF GRANT OF PATENT

Pursuant to Rule 20 (3) of the ARIPO Regulations it is hereby certified that patent No: AP 2675 has been granted to :

Name: THE TRUSTEES FOR THE TIME BEING OF THE PHILIP EDWARD LAWRENCE RISI TRUST

Address 47 Liza Avenue, Flamwood, Klerksdorp, 2571, North West Province, South Africa

On the day of 23 May, two thousand and thirteen having effect in the following designated contracting States :

BOTSWANA	GAMBIA	GHANA	KENYA	LESOTHO
MALAWI	MOZAMBIQUE	NAMIBIA	SIERRA LEONE	SUDAN
SWAZILAND	TANZANIA	UGANDA	ZAMBIA	ZIMBABWE

In respect of an invention disclosed in Patent Application No: AP/P/2009/004995

being an invention entitled : The distribution of electricity

F. A. Dos Santos
DIRECTOR GENERAL

The Combi Unit

Introduction
The Combi Unit is a transformer protection cutout that combines both a drop out surge arrester and fuse expulsion link into one single device.

Surge Arrester
The surge arrester housed in the Combi Unit, will protect both the fuse and transformer from over-voltages. In the event of a surge arrester failure the Combi Unit will isolate that particular phase of the transformer, thereby eliminating further over-voltage to that phase of transformer. This provides a fail safe system to protect the transformer.

Fuse Carrier
The fuse carrier will isolate an overloaded or faulty transformer. The phase is isolated when the current drawn through the fuse element exceeds the rating thereof.

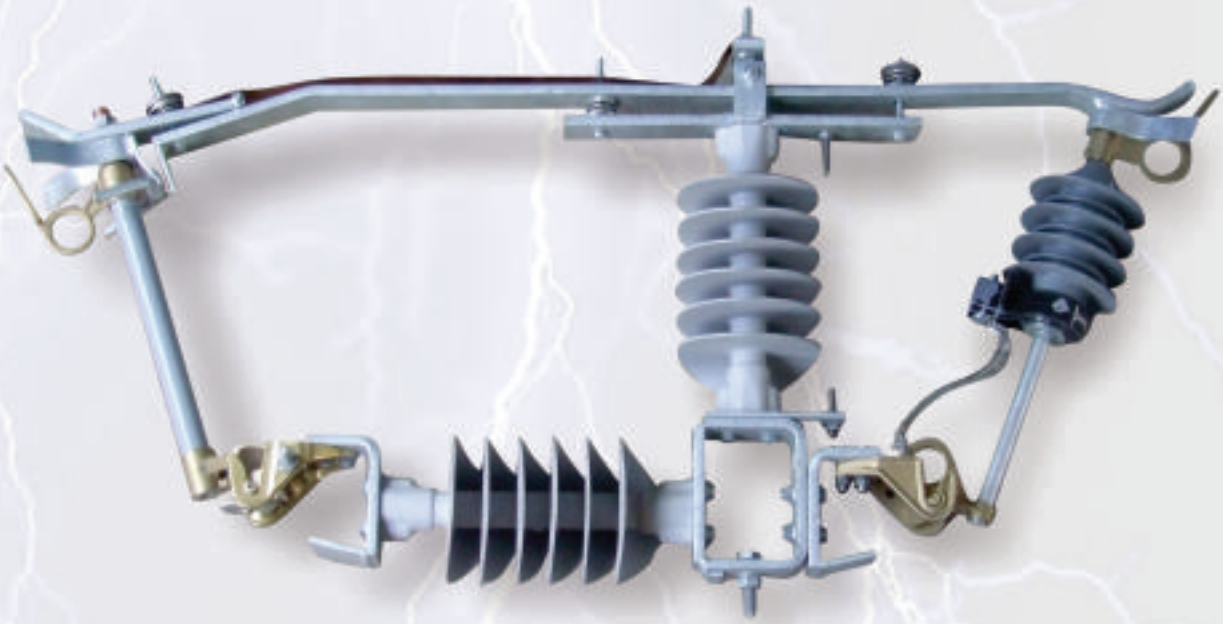

Function
The Combi Unit is designed to protect distribution transformers from lightning and over-voltage and isolate faulty transformers. The size of the transformers it can protect are between 16kVA to 1MVA, on medium voltage networks ranging 3.3kV, 6.6kV, 12kV, 15kV, 24kV, 27kV up to 36kV.

Ratings
- Operating voltage: 12kV, 15kV, 24kV, 25kV, 27kV, 35kV & 36kV.
- Continuous current rating is 100A.
- Load break current on the base is 7A.
- The breaking capacity is 4kA for the 12kV, 24kV & 36kV (Greater fault levels are available on request).
- Creepage - Coastal applications.

Typical Installation

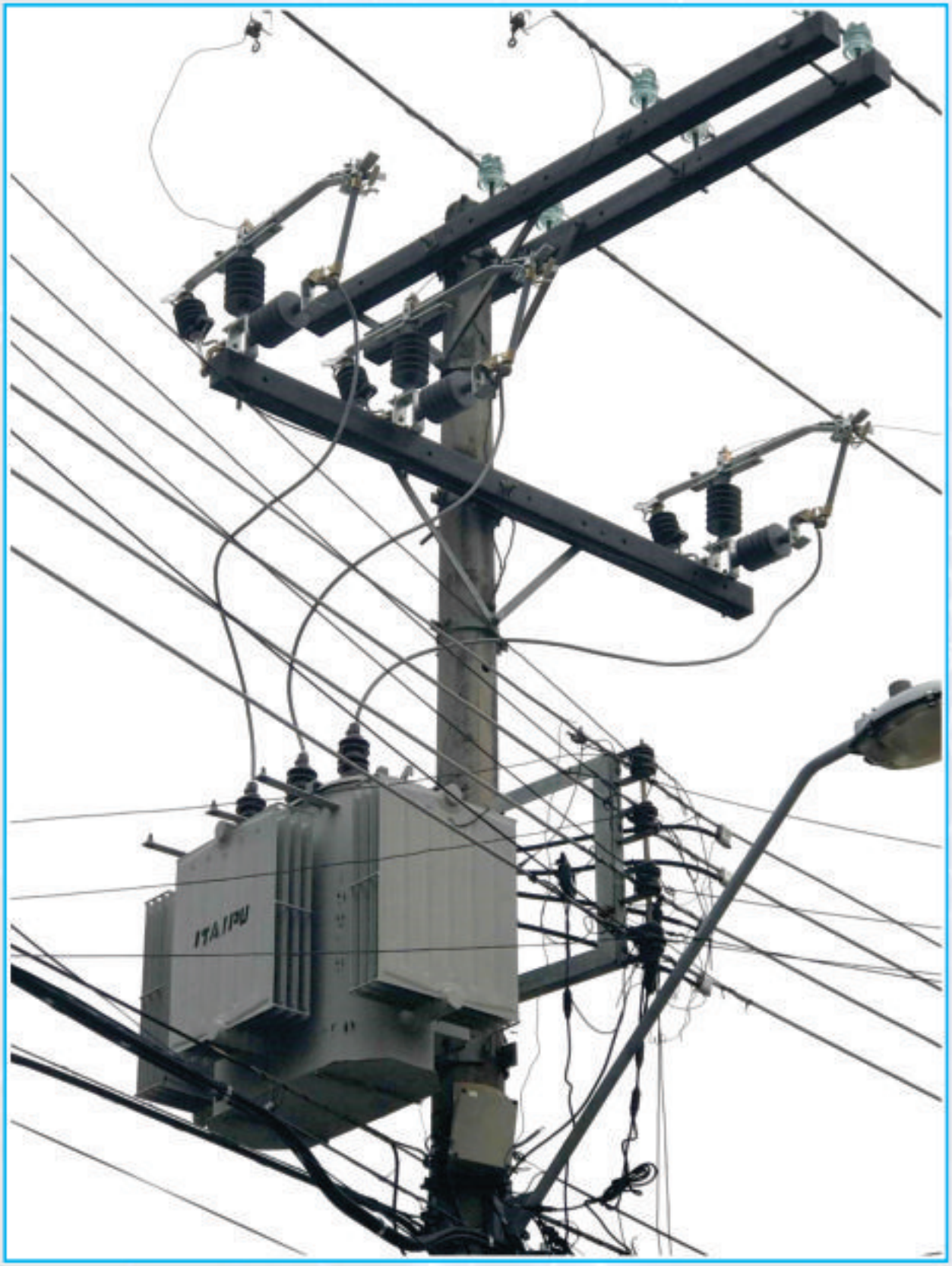

Photo: Eletrobras, Manaus, Brazil

Advantages of the Combi Cutout

The operator has zero chance of falling, getting shocked or any other injury.

Replace surge arresters with a Hotstick
It is much safer & more cost effective to replace a surge arrester from ground level.

Nuisance fusing eliminated
The Combi Unit configuration does not allow for error in connections of the fuse and surge arrester. The Combi Unit needs to be installed within 1 meter of the transformer and ensures that the fuse and surge arrester are in connected in parallel. The fuse cannot be placed into the surge arresters holder or vice versa because they vary in length.

Convenient to maintain
The surge arrester takes 3 min to replace rather than 3 hours. The older, conventional surge arresters do not have live line, link stick replacement features. The Combi Unit therefore enhances safety during surge arrester maintenance.

No customer outage for maintenance
Previously, surge arresters required a scheduled outage which may have taken weeks to arrange. The Combi Unit surge arrester is replaced immediately on the spot, when it requires replacement.

100% ensured transformer surge protection
When the surge arrester blows it isolates the phase thus ensuring that no further surges can continue to damage the transformer until a new one is installed. The user cannot turn the power on until a new surge arrester is installed. This is called unique surge arrester alert.

Advantages of the Combi Cutout

A conventional surge arrester replacement can take an electrical utility between 1-4 hours.

SAFETY FIRST!

ELIMINATE THE SURGE ARRESTER REPLACEMENT PROCEDURE:

1. Phone customer to arrange a planned outage (24-48 hours before the maintenance)
2. Phone control and inform them of duties (5-10 minutes)
3. Drive to site (5-30 minutes)
4. Install portable earth kits (5 minutes)
5. Get ladder and load it off vehicle (5 minutes)
6. Get FAS kit on (fall arrest safety kit on 5-10 minutes)
7. Get tool box and gloves on (5-10 minutes)
8. Remove old surge arrester with spanner (20-30 minutes)
10. Remove the portable earth kits (5 minutes)
11. Remove the FAS kit (5 minutes)
12. Remove the ladder (5 minutes)
13. Finalise safety checks & drive back to substation (20 Minutes)
14. Phone control and tell them power will be switched on (5 minutes)
15. Close the links and restore power

Live Line Surge Arresters versus the Old System

BEFORE

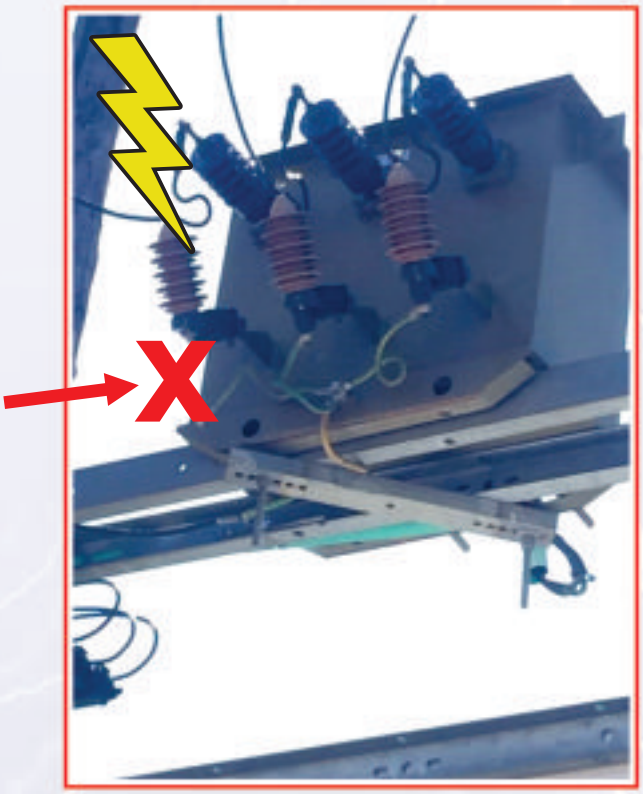

- Outage required (3-4 hours).
- Very high cost.
- Multiple fuse blows recorded at this transformer.
- 2-3 hours arrester replacement time.
- Arrester replaced with tools.
- Outage needs to be arranged.
- Poor customer service.
- Many customers affected.
- Many outage hours are logged from the time of customer call.
- Loss of revenue for utility due to long outage duration (kWh lost).
- Unsafe.
- No physical or electrical indication when the arrester is spent.
- Climb, poles and exposure to falling often in wet weather (slipping & falling).

AFTER

- Eliminates transformer failure.
- Low long term savings.
- Hot Stick (Link Stick) replacement.
- Eliminate nuisance fuse blows.
- Replace surge arrester live line.
- Replace surge arrester from ground.
- Safer system.
- Faster system.
- Convenient.
- Better customer service.
- Visual & electrical indication of spent surge arrester.
- No outage (NO SWITCHING OFF) of the line required.
- A 100kV Hot Stick (Link Stick) is safer from ground than a ladder from heights.

Combi Insertion Tool

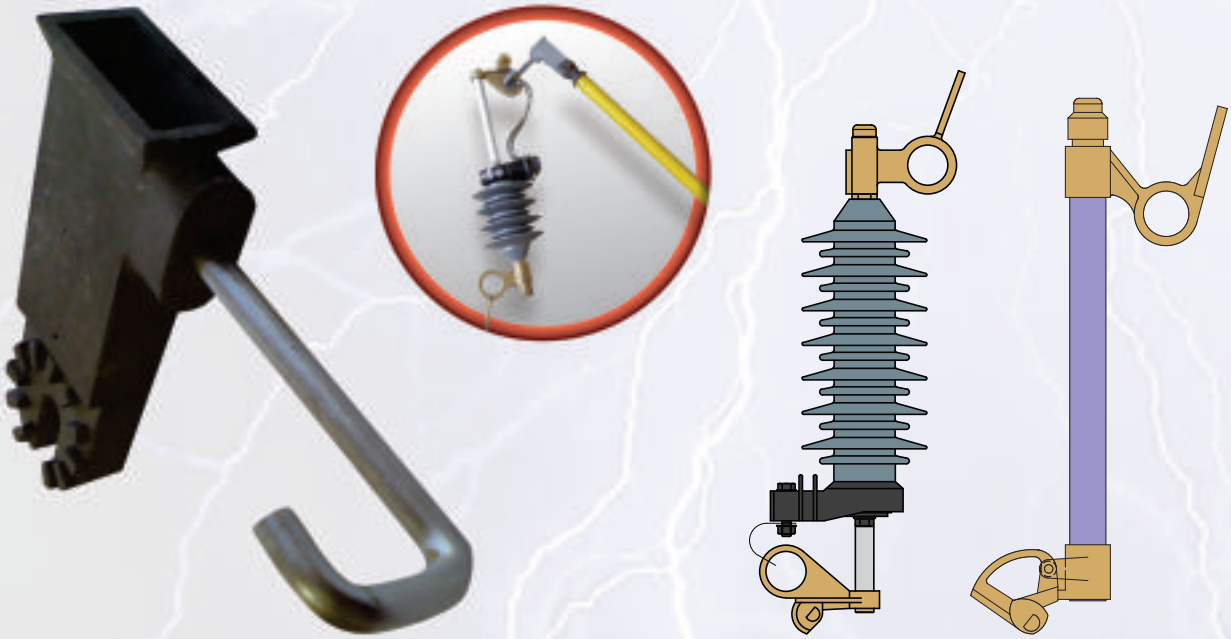

Combi Insertion Tool Surge Arrester Fuse Carrier

How does it work?
The LLT Combi Insertion Tool has been tested to ensure safety & effortless replacement of surge arresters Combi Unit & drop out surge arrester and fuse carrier. This ensures the safety for the utility staff.

It is made from aluminium to provide a rustproof, light but durable unit.

A fuse carrier is approximately 1kg. An arrester is approximately 3-5kg.

It has specifically been designed to carry heavier units such as the 11kV, 22kV & 33kV LLT surge arresters, but will also work on all the standard fuse tubes already in the field. The unit fits at the end of any Link Stick, by means of the standard rose connection at the bottom of the unit.

What are its features?
Insertion Slot - It has a special slot which carries both the Eskom fuse link & LLT surge arresters. This helps for centre of gravity when it comes to Inserting the heavier units such as the LLT surge arresters.

It fits at the end of the flower end of any Link Stick.

Removal Hook - The hook is an easy way of clipping the surge arrester & fuse carrier unit, out of its carrier. Once it is clipped out, it can be positioned in its slot or carried down to ground level.

Customer Installation: Lesotho Power Company

BEFORE

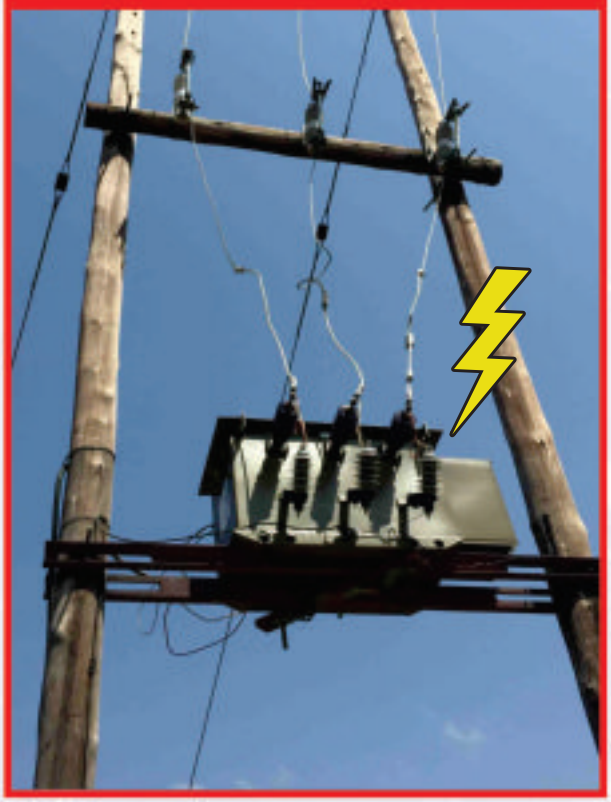

Thuate Mountain Econet Tower

1 x Transformer has been lost.

Issues:

Fuses in front of surge arrester and in lightning path.

Fuses will blow in lightning storms.

Surge arresters are behind fuses and cannot function during lightning.

Surges take too long to replace.

Surge arresters blow without staff knowing.

Transformers blow before 20 year lifespan.

AFTER

Summary of improvements:

1. Transformer only has lesser chance of getting damaged.
2. Improved earthing & bonding system. The Combi Unit system has a two earth system.
3. Surge arrester replacement is easier, quicker and enforced.
4. Replace the surge arrester from ground and easily identified.
5. Safer to replace the surge arrester from ground.

3.3kV-24kV Combi Unit

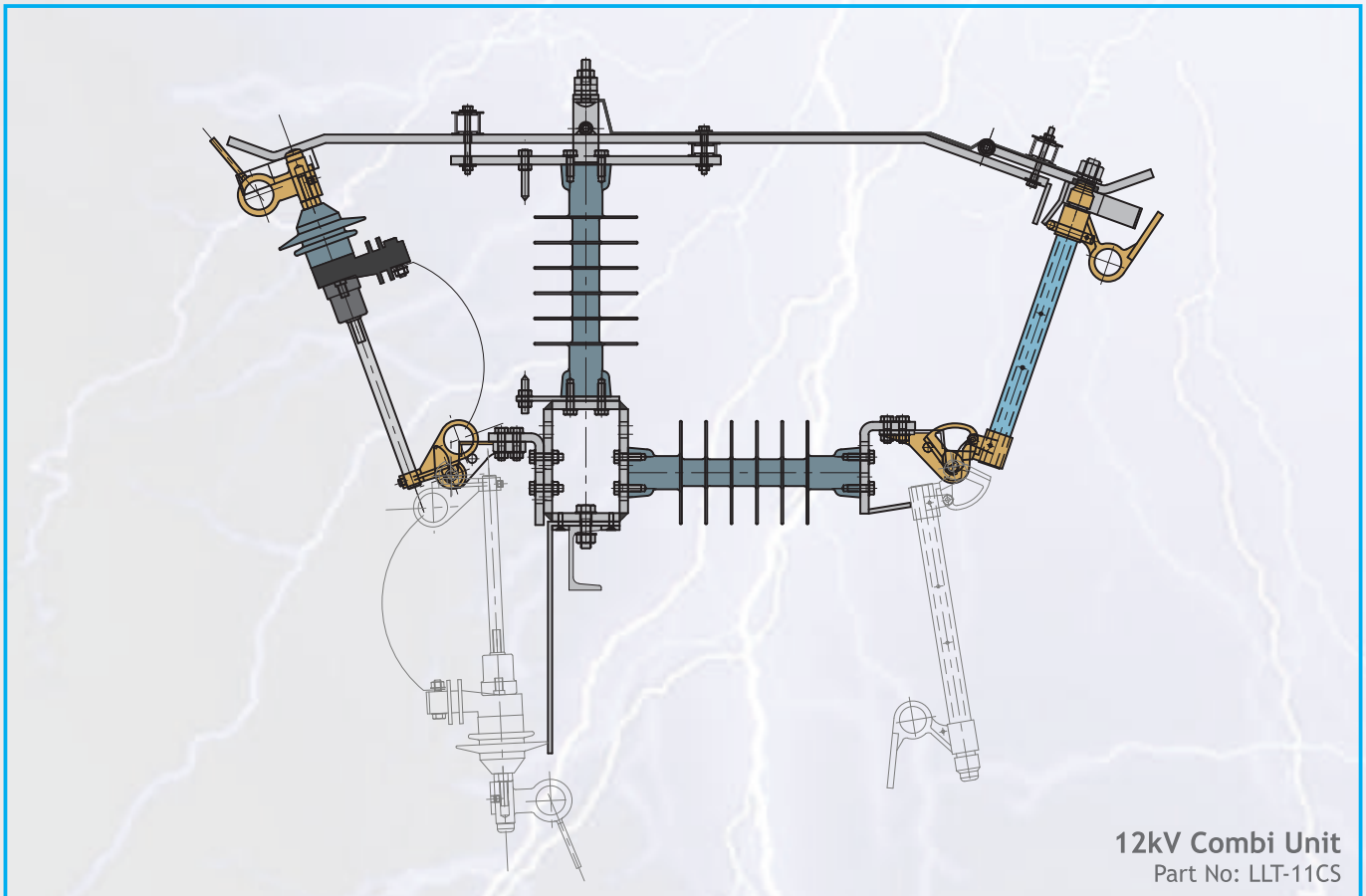

12kV Combi Unit
Part No: LLT-11CS

The Combi Unit can be installed on transformers from 3.3kV-36kV and sizes 16kVA-1mVA

Combi Unit Components

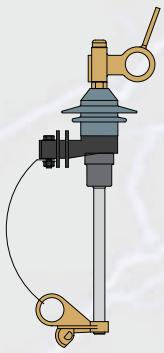

3.3kV Arrester
Part No: LLT-A3.3KC

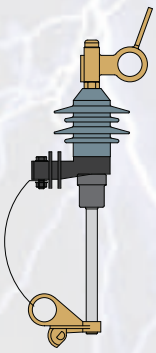

6.6kV Arrester
Part No: LLT-A6.6KC

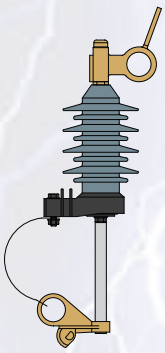

12kV
Part No: LLT-A12KC

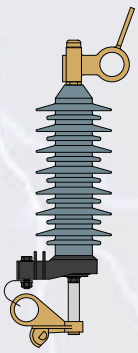

24kV
Part No: LLT-A24KC

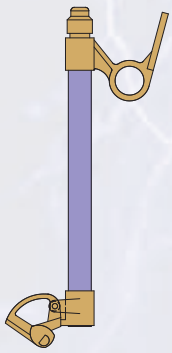

24kV Fuse Carrier
Part No: LLT-FC100

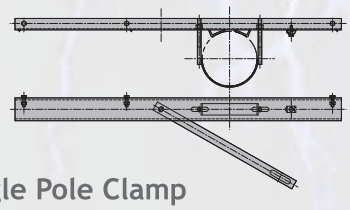

Single Pole Clamp
Part No: LLT-22/3HB

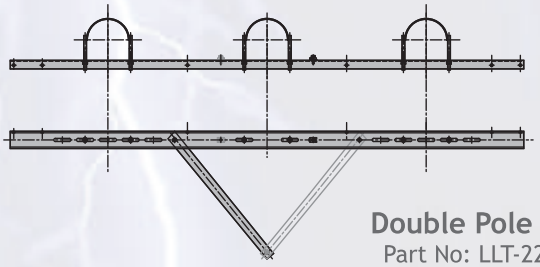

Double Pole Clamp
Part No: LLT-22/3HB2

33kV Combi Unit

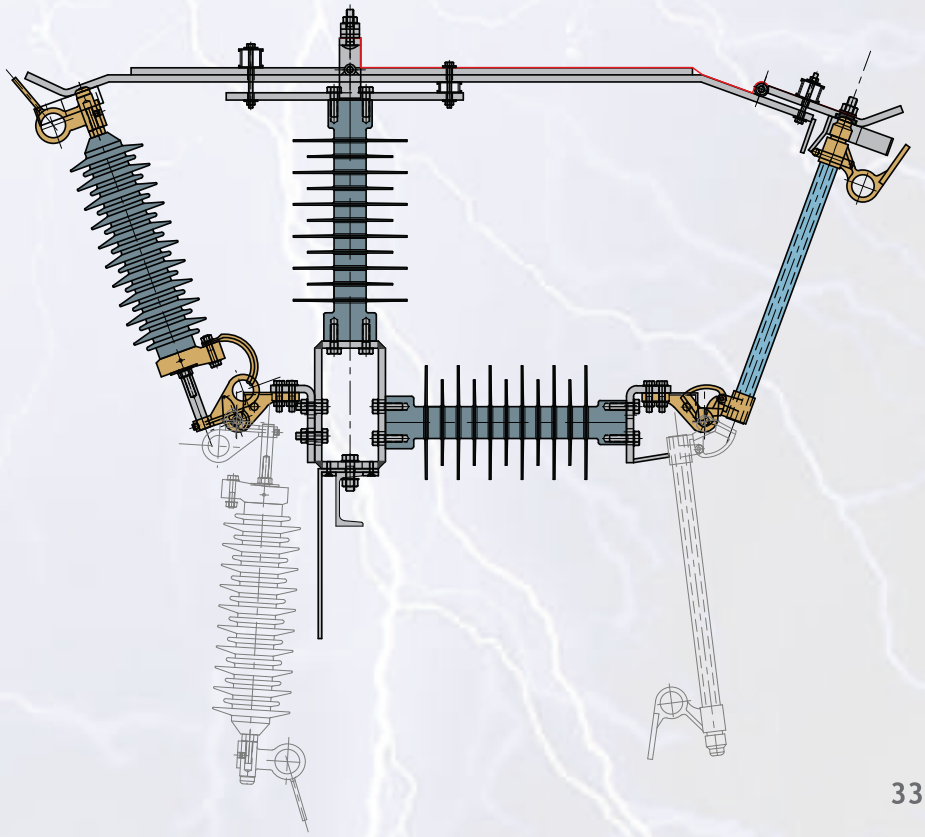

33kV Combi Unit
Part No: LLT-33CS

The Combi Unit can be installed on transformers from 3.3kV-36kV and sizes 16kVA-1mVA

Combi Unit Components

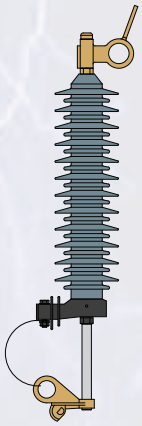

33kV Arrester
Part No: LLT-A33KC

33kV Fuse Carrier
Part No: LLT-FC300

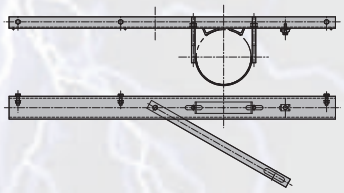

Single Pole Clamp
Part No: LLT-22/3HB

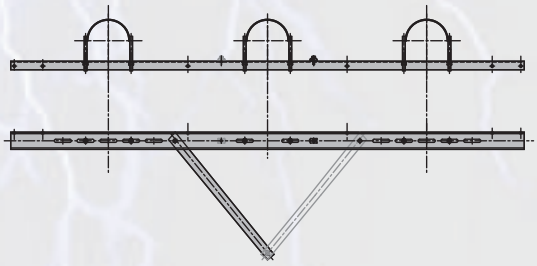

Double Pole Clamp
Part No: LLT-22/3HB2

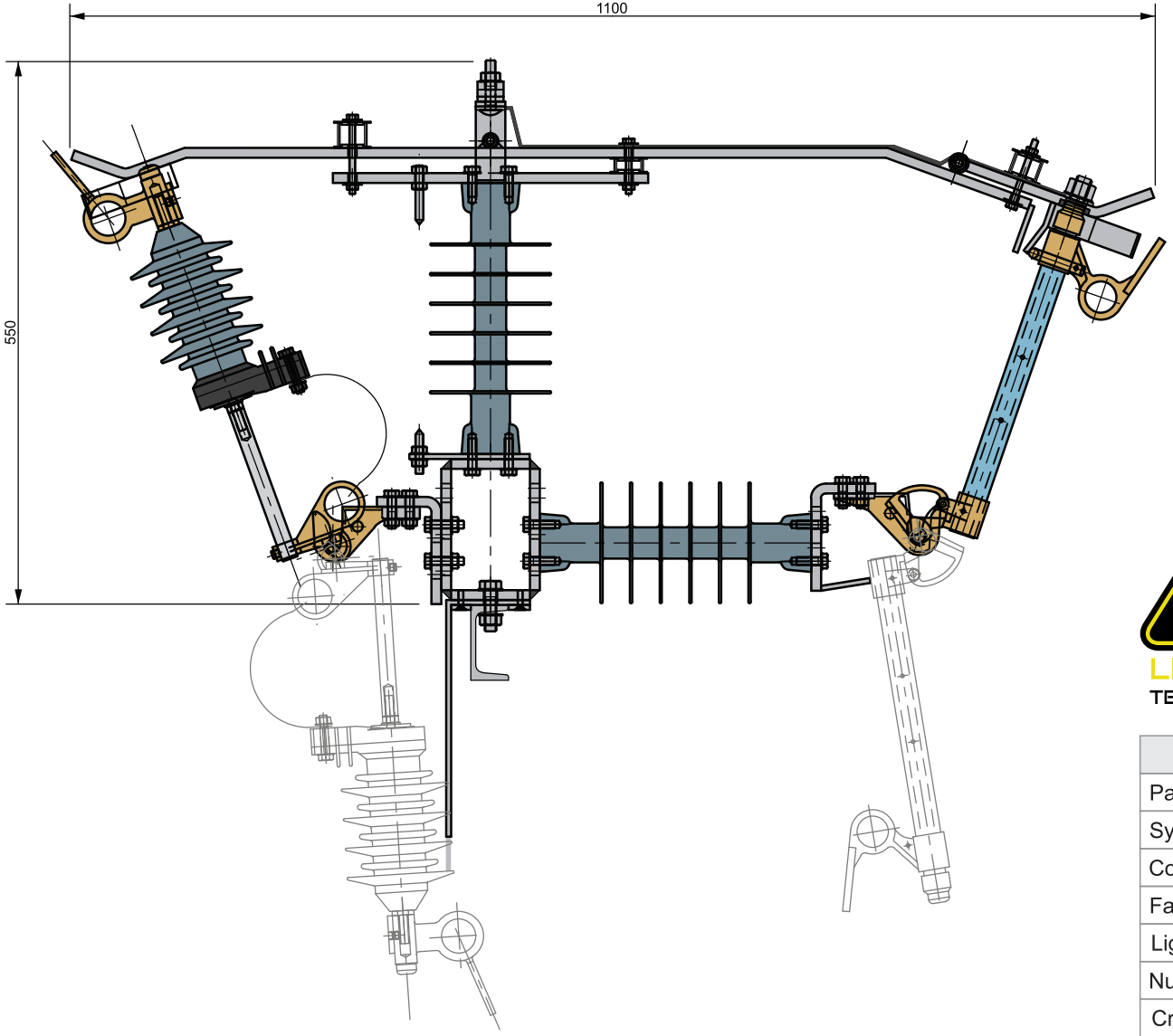

LIVE LINE TECHNOLOGY

12kV Combi Unit Product Data Sheet

12kV Combi Unit Rating	
Part Number	LLT-11CS
System Voltage	12kV
Continuous Current	100A
Fault Current	4kA
Lightning Impulse Withstand Voltage	220kV
Number of Sheds	6
Creepage	836mm
Weight	8kg
Box Dimensions	600w x 150d x 1177h

Electrical and Mecanical Ratings in Accordance with IEC 282-02

Designed by AFG

DRAWING NUMBER
0926 - 01 - 00/12

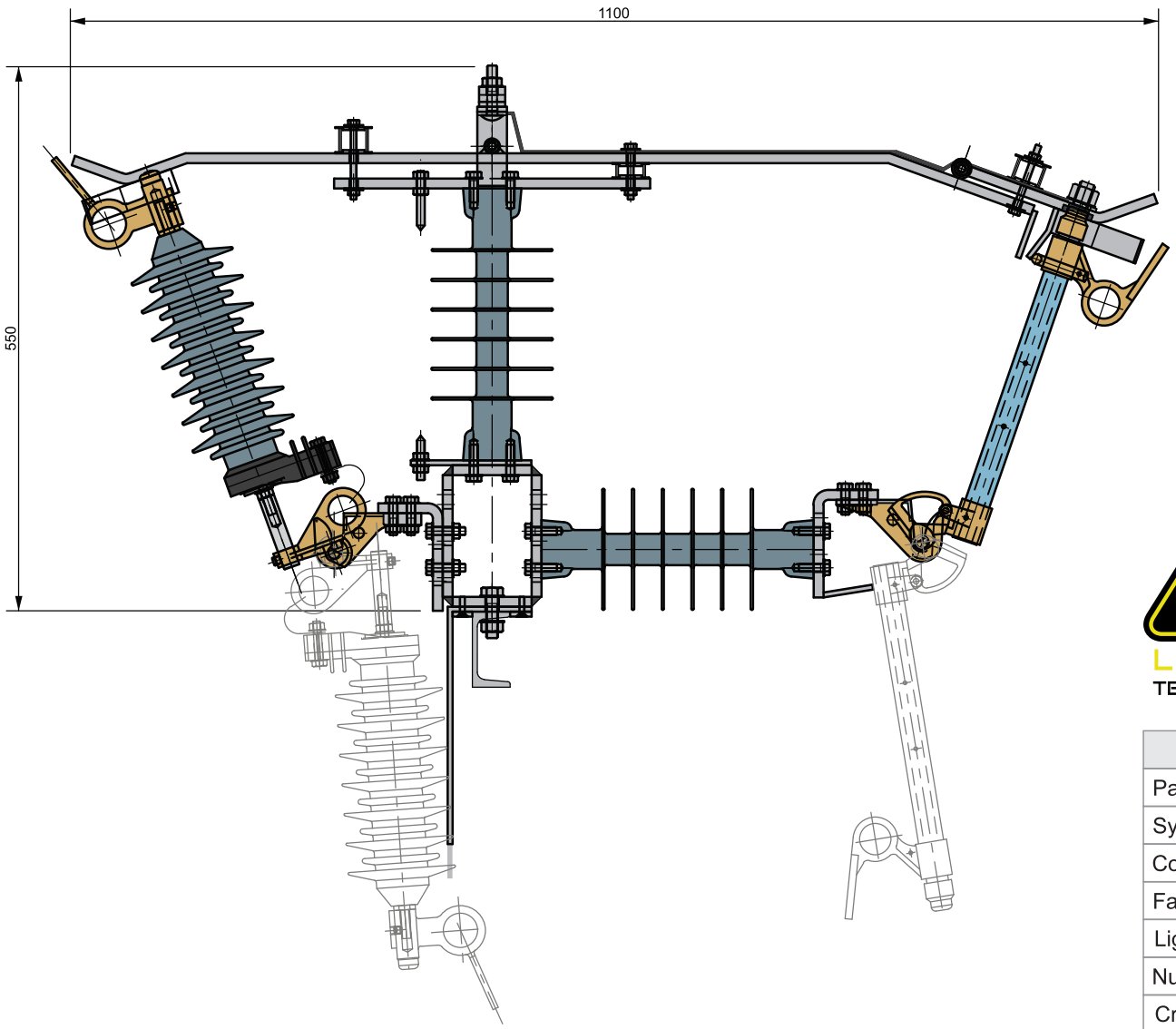

LIVE LINE TECHNOLOGY

24kV Combi Unit Product Data Sheet

24kV Combi Unit Rating	
Part Number	LLT-22CS
System Voltage	24kV
Continuous Current	100A
Fault Current	4kA
Lightning Impulse Withstand Voltage	220kV
Number of Sheds	6
Creepage	836mm
Weight	8kg
Box Dimensions	600w x 150d x 1177h

Electrical and Mecanical Ratings in Accordance with IEC 282-02

Designed by AFG

DRAWING NUMBER
0926 - 01 - 00/24

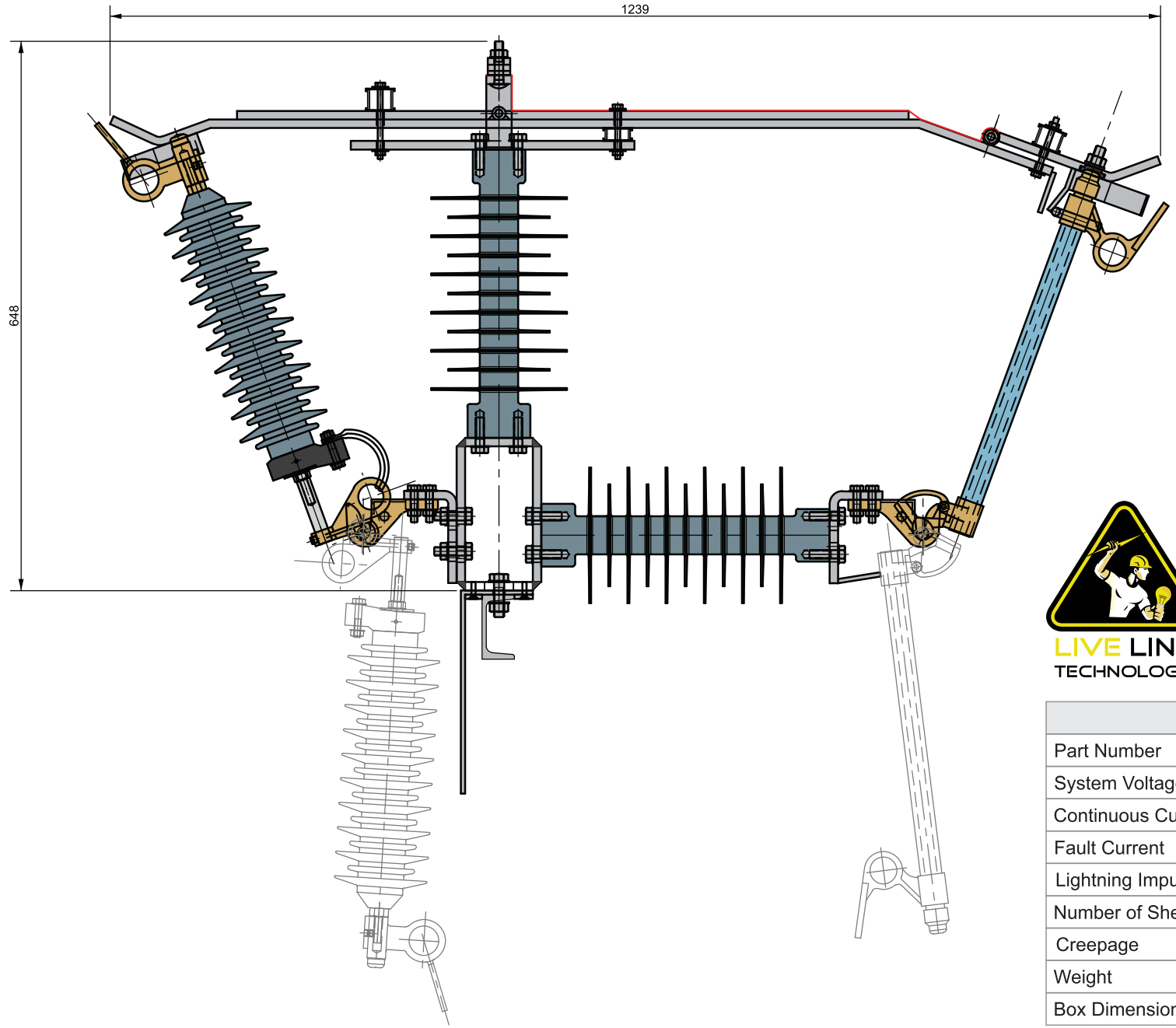

LIVE LINE TECHNOLOGY

36kV Combi Unit Product Data Sheet

36kV Combi Unit Ratings	
Part Number	LLT-33CS
System Voltage	36kV
Continuous Current	100A
Fault Current	4kA
Lightning Impulse Withstand Voltage	220kV
Number of Sheds	6
Creepage	836mm
Weight	8kg
Box Dimensions	710w x 155d x 1250h

Electrical and Mecanical Ratings in Accordance with IEC 282-02

Designed by AFG

DRAWING NUMBER
0926 - 11 - 00_36

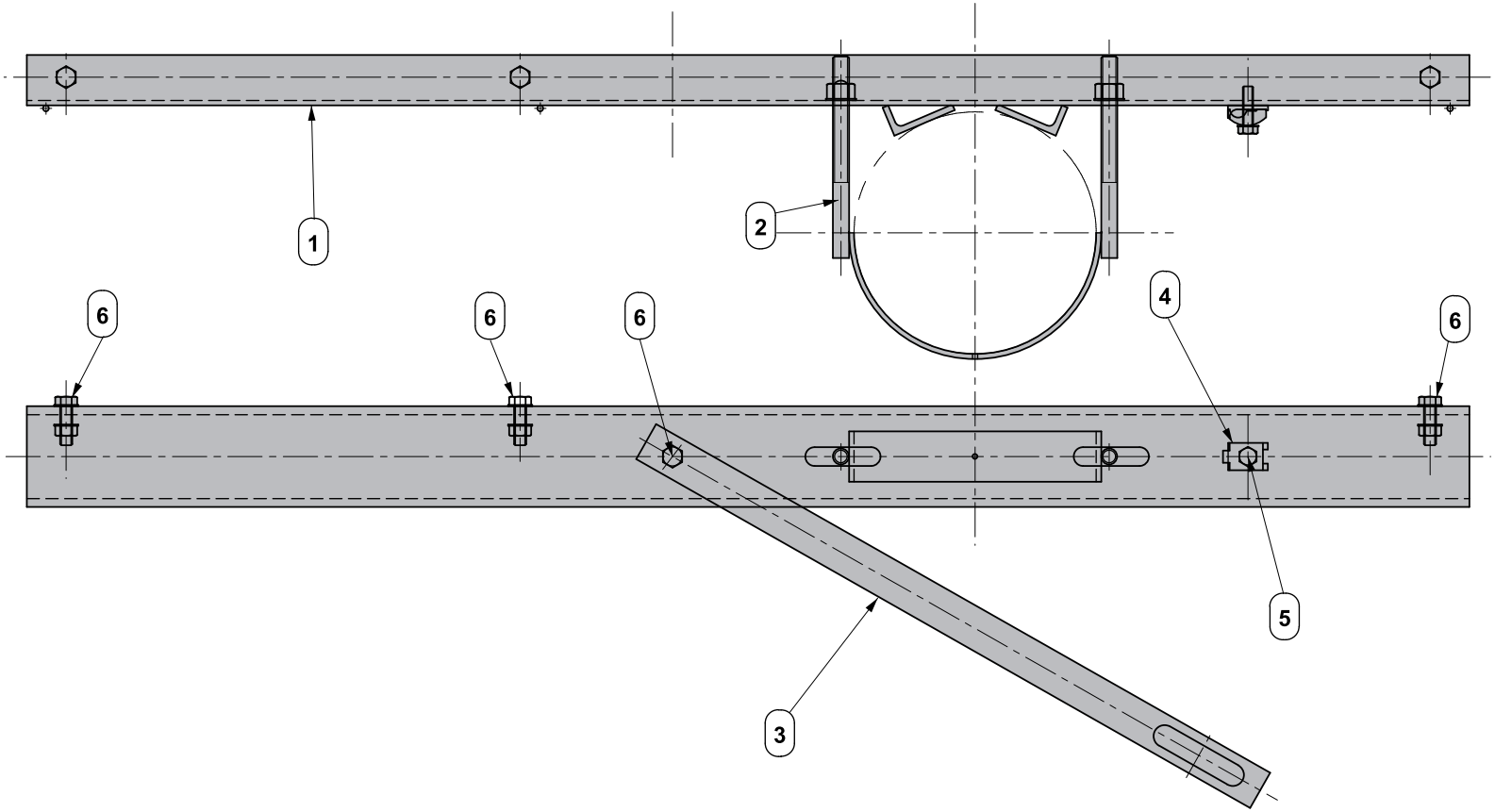

LIVE LINE TECHNOLOGY

Single Pole Clamp Product Data Sheet

Single Pole Clamp Specifications	
Part Number	LLT22/3HB
Material	HDG Steel
Weight	20kg
Box Dimensions	1400l x 10d x 10h

Electrical and Mecanical Ratings in Accordance with IEC 282-02

Designed by AFG

DRAWING NUMBER
1926-05-01

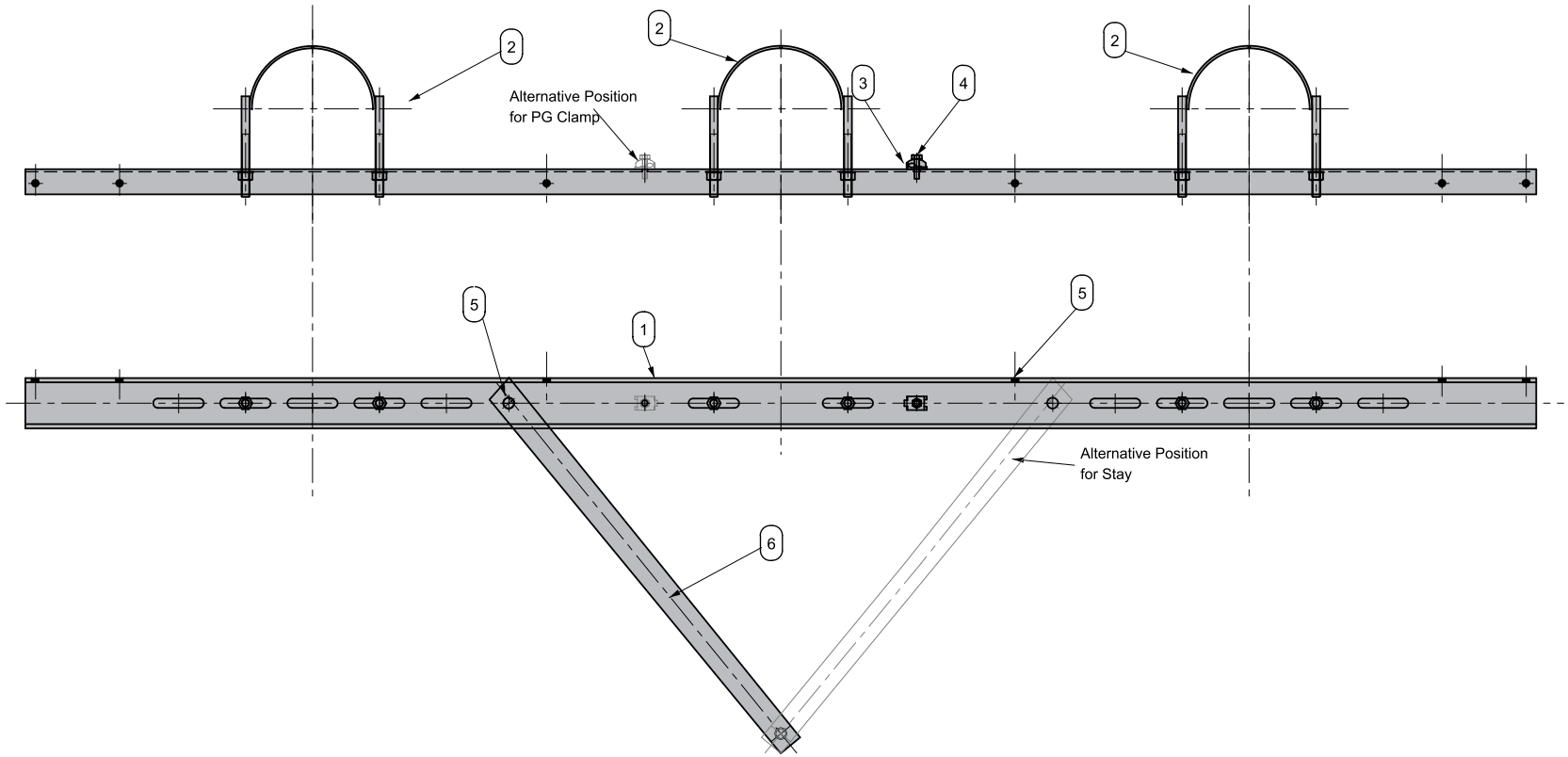

LIVE LINE TECHNOLOGY

Double Pole Clamp Product Data Sheet

Double Pole Clamp Specifications	
Part Number	LLT22/3HB2
Material	HDG Steel
Weight	25kg
Box Dimensions	3000l x 10d x 10h

Electrical and Mecanical Ratings in Accordance with IEC 282-02

Designed by AFG

DRAWING NUMBER
1926-05-01

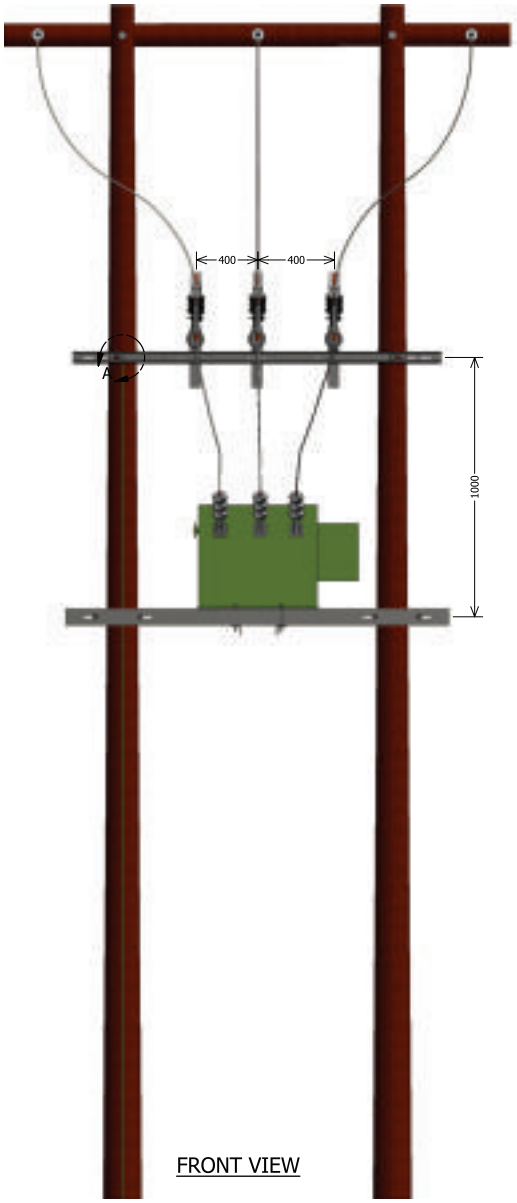

FRONT VIEW

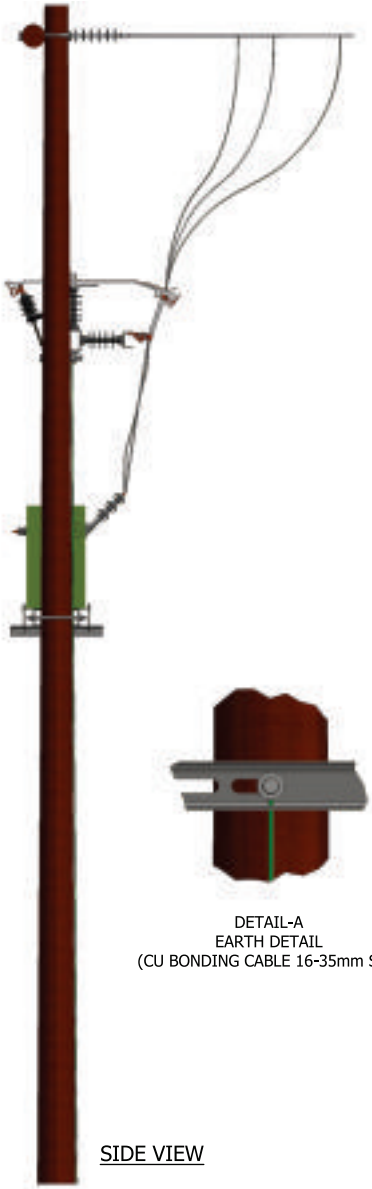

SIDE VIEW

DETAIL-A
EARTH DETAIL
(CU BONDING CABLE 16-35mm SQ.)

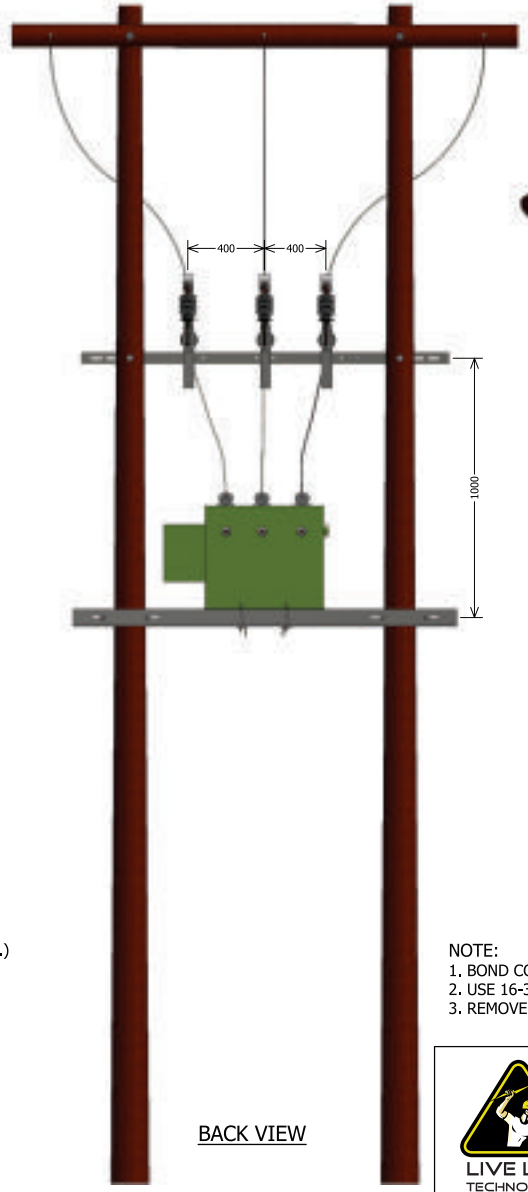

BACK VIEW

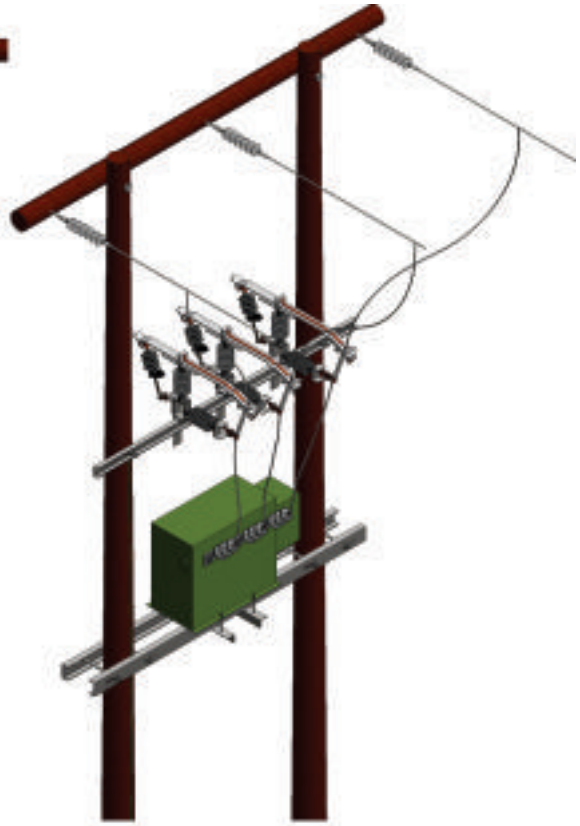

NOTE:
1. BOND COMBI TO TRANSFORMER TANK.
2. USE 16-35mm SQ. COPPER OR EQUIVALENT FOR GROUNDING BY CROWFOOT EARTH.
3. REMOVE OLD TANK SURGE ARRESTERS.

LIVE LINE TECHNOLOGY

DRAWN K.R	08/02/2021	LIVE LINE TECHNOLOGY www.liveline.co.za
CHECKED K.R		TITLE
QA		H-POLE COMBINED CUTOUT COMBI UNIT INSTALLATION
MFG		
APPROVED KEVIN RISI		
Tel: +27184685080		SIZE D / DWG NO COMBI-001/21 / REV
sales@liveline.co.za		SCALE - 1:1 / SHEET 1 OF 1

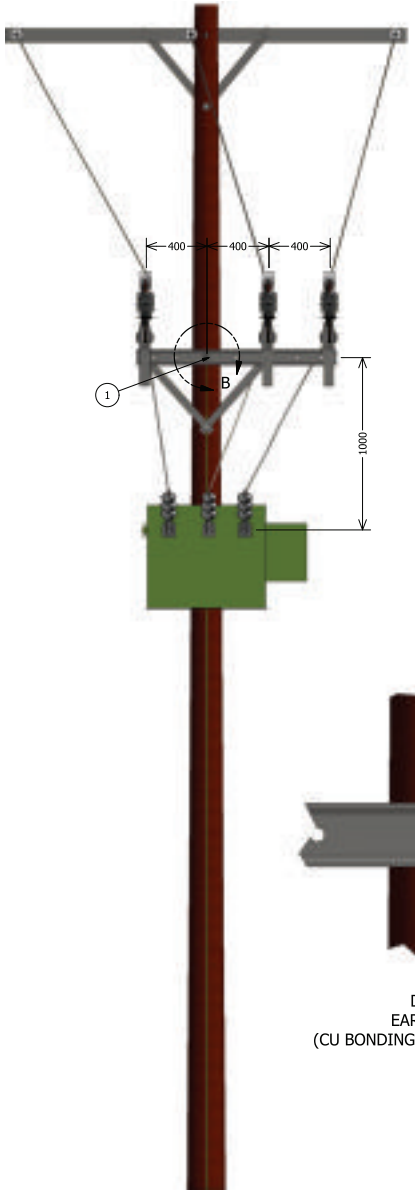

FRONT VIEW

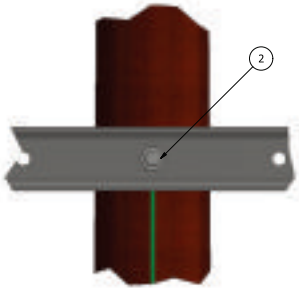

DETAIL-B
EARTH DETAIL
(CU BONDING CABLE 16-35mm SQ.)

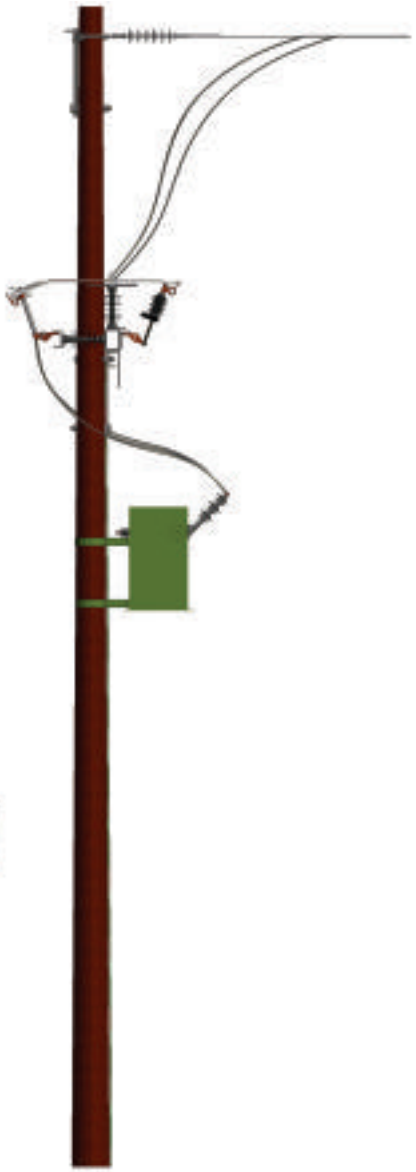

SIDE VIEW

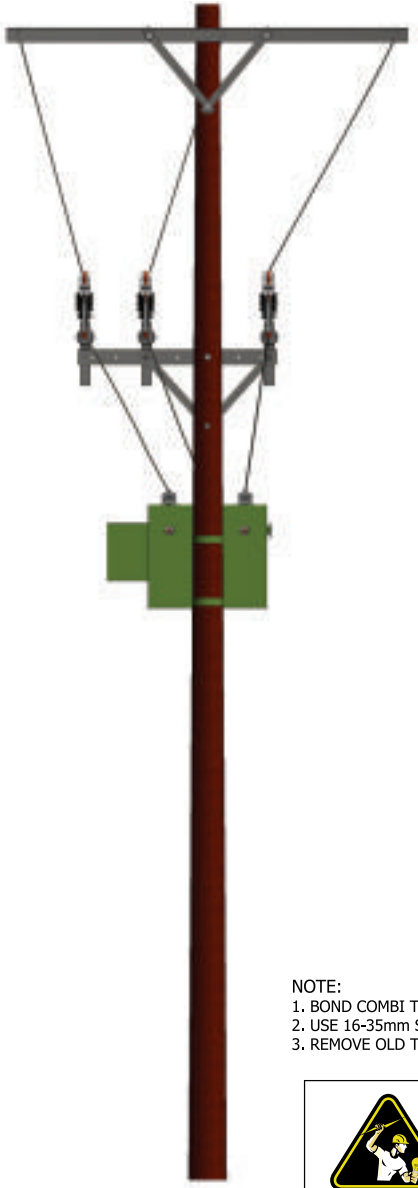

BACK VIEW

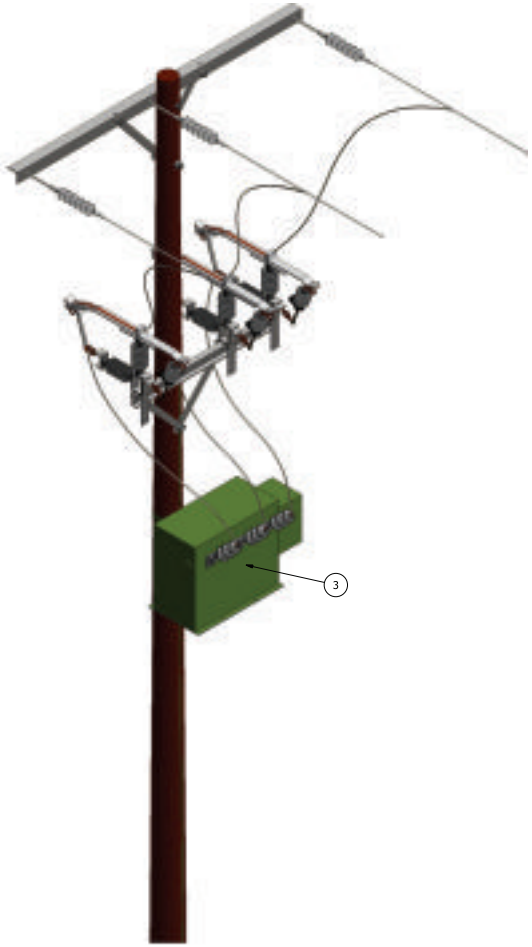

NOTE:
1. BOND COMBI TO TRANSFORMER TANK.
2. USE 16-35mm SQ. COPPER OR EQUIVALENT FOR GROUNDING BY CROWFOOT EARTH.
3. REMOVE OLD TANK SURGE ARRESTERS.

LIVE LINE TECHNOLOGY

DRAWN K.R	08/02/2021	LIVE LINE TECHNOLOGY www.liveline.co.za
CHECKED K.R		TITLE
QA		SINGLE-POLE COMBINED CUTOUT COMBI UNIT INSTALLATION
MFG		
APPROVED KEVIN RISI		SIZE D / DWG NO COMBI - 002/21 / REV
Tel: +27184685080		SCALE - 1:1 / SHEET 1 OF 2
sales@liveline.co.za		

3.3kV-36kV Rocker Arm Firewall

Introduction

Firewall bracket (Universal)
The firewall is used for line surge protection and is available in voltages up to 36kV. The firewall bracket is universal and can house various brands of surge arrester from manufacturers such as Maclean, Cooper, ABB, Balestro and Areva/Tridelta.

Live Line Surge Arrester
The surge arrester housed in the firewall unit, will protect the overhead line from overvoltages. In the event of a surge arrester failure the surge arrester will drop out signaling replacement.

The firewall bracket unit will become part of that line infrastructure for the 20-30 year period, which will house many surge arresters during its lifespan, thereby eliminating further power outages due to surge arrester maintenance.

It is advisable to install firewall brackets in areas with higher lightning activity where surge arrester replacement is more frequent, in industries where shutdown is an issue, in the city and in areas with high level clients and tough customers.

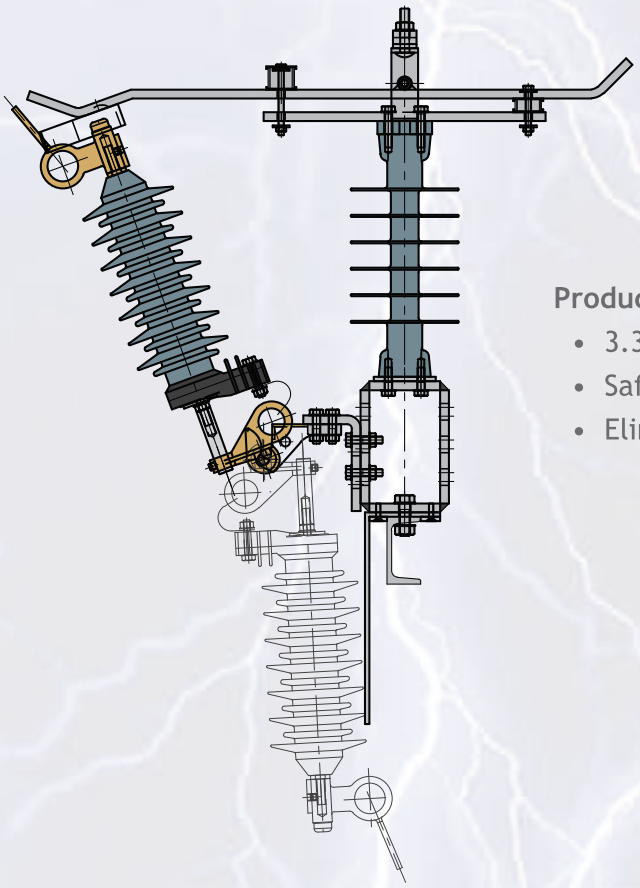

Product Features:

- 3.3kV-36kV drop out surge arrester
- Safe replacement via Link Stick
- Eliminate outage time

Function
The firewall is designed to protect overhead lines form overvoltage and will enable the utility to populate the line without worrying about outages (maintenance) at a later stage for replacement. Firewalls have also been used at the transformer for easier surge arrester replacement, instead of the conventional surge arrester system.

Ratings
Operating voltages: 3.3kV, 6.6kV, 12kV, 15kV, 24kV, 27kV and 36kV voltage ratings.

Advantages of the Rocker Arm Firewall Installation

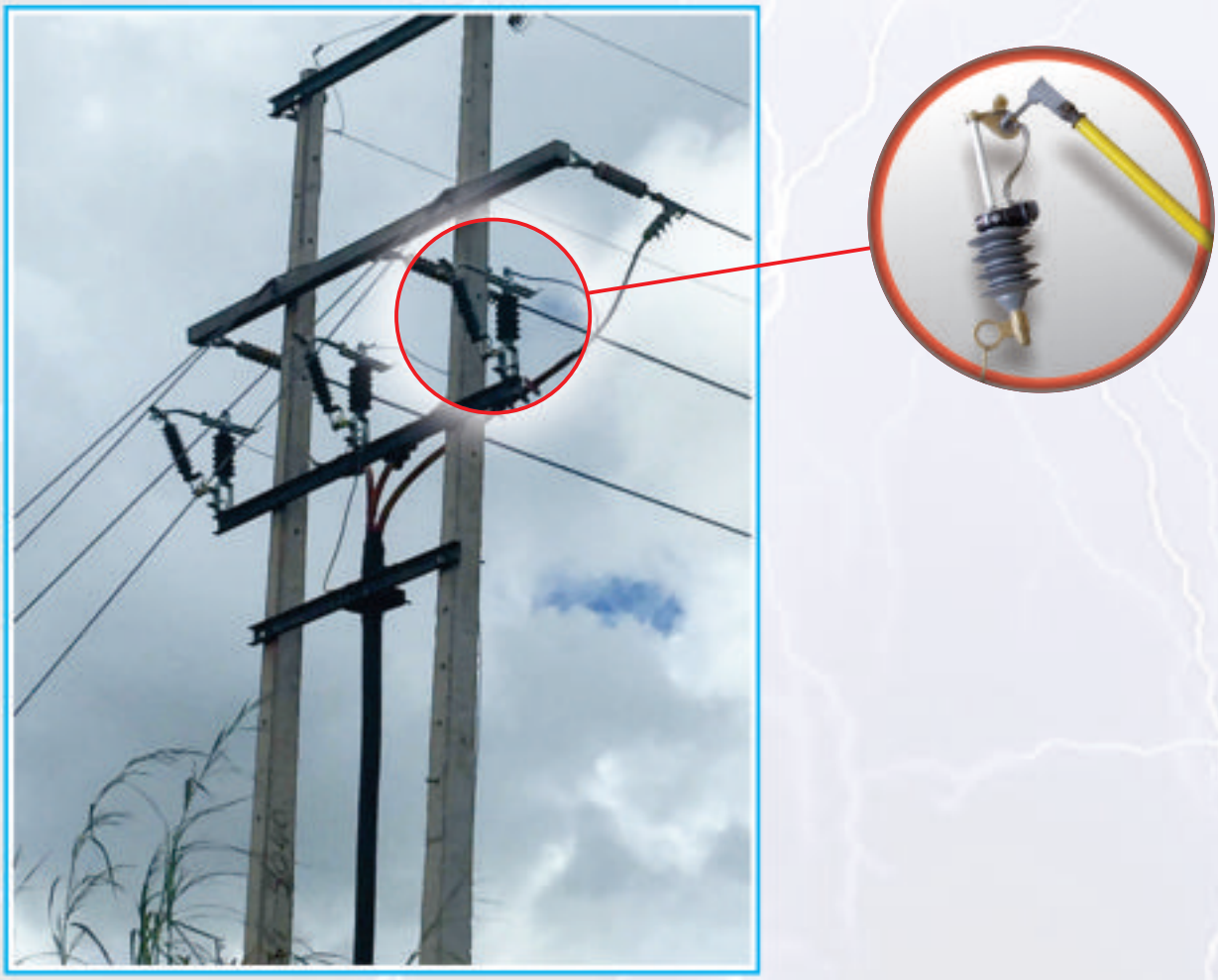

1. Changed Live Line
2. Changed from Ground
3. Easily identified when blown
4. Safer
5. Easier maintenance
6. Easy and Effective replacement
7. Elimination of outage times
8. Cost Effective method of protecting an area
9. Arrester can effectively be opened when there are problematic arresters or GLD's
10. Easy isolation during fault finding
11. Operational staff relieved of dangerous situations
12. Operational staff response to arrester maintenance improved
13. On the spot replacement
14. Improving staff mindsets by providing easier maintenance of arrester unit
15. Fear factor of operational staff removed when working on high voltage equipment
16. Line inspections a pleasure
17. Spent arresters are easily noticed for replacement from previous lightning incidents
18. Risk of equipment exposure eliminated
19. Faulty units immediately replaced, no postponing of the maintenance effort
20. Used at distribution line ends and T-offs (voltage doubling points)

Rocker Arm Firewall – Drop Out Surge Arresters - Operation Mode

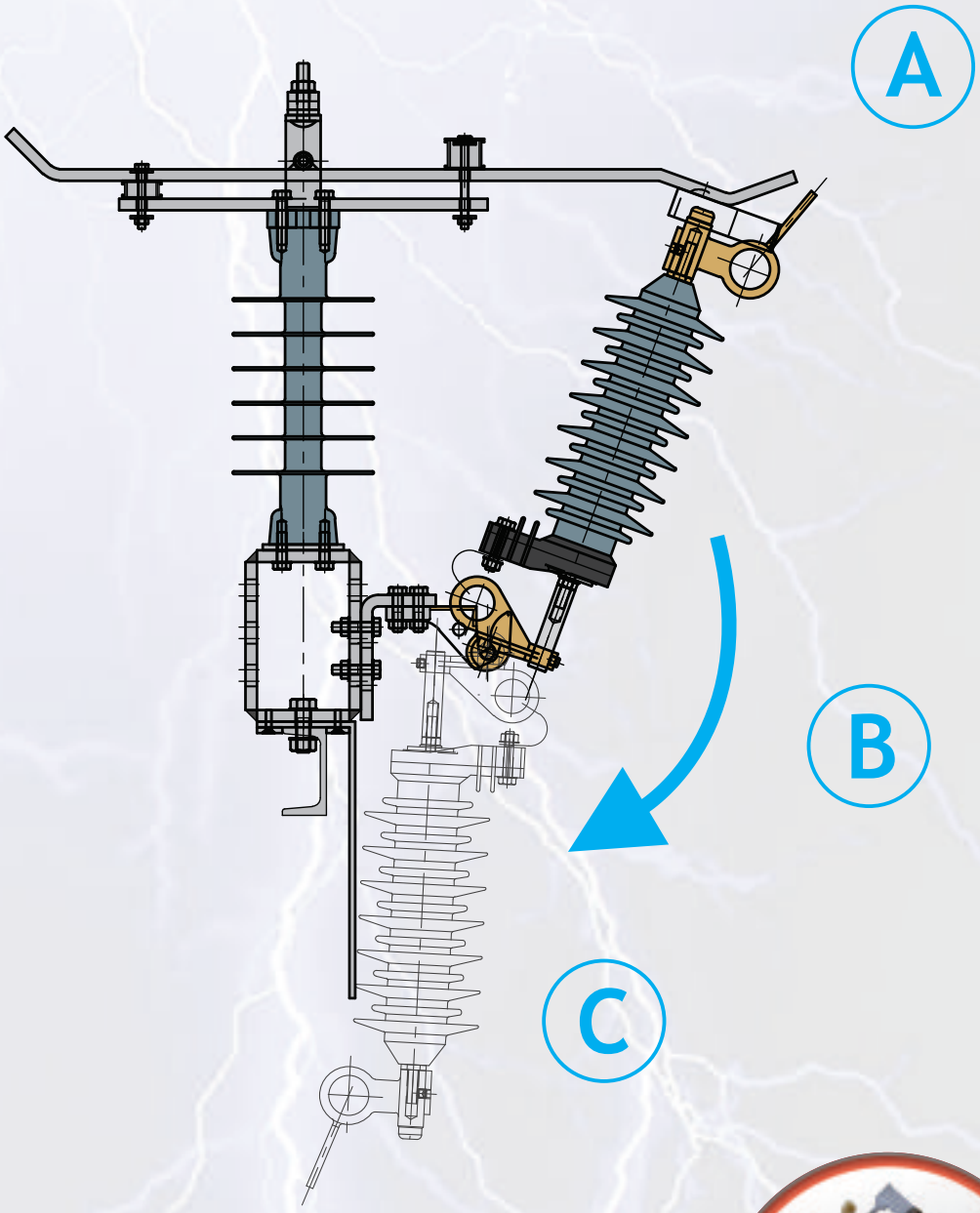

Position A
The position of the surge arrester during normal operation. Surge arresters will drain lightning energy to earth.

Position B
The position of the surge arrester after a surge arrester has expired.

Position C
The surge arrester can be replaced safely with the Link Stick without turning the power off.

Firewall Rocker 3.3kV-27kV Drop Out Surge Arresters

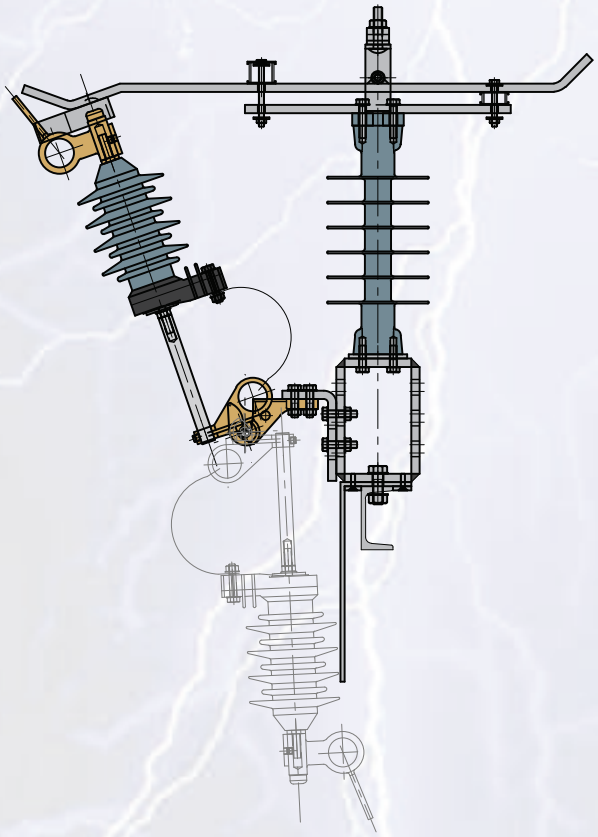

12kV Rocker Arm Firewall
Part No: LLT95/3621

The Firewall can be installed on power lines from 3.3kV-36kV

Rocker Arm Firewall Components

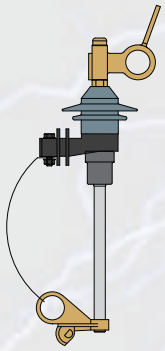

3.3kV Arrester
Part No: LLT-A3.3KC

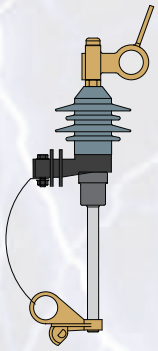

6.6kV Arrester
Part No: LLT-A6.6KC

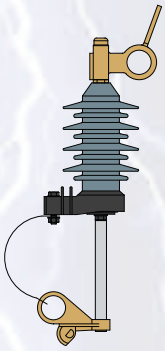

12kV
Part No: LLT-A12KC

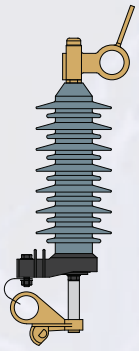

24kV
Part No: LLT-A24KC

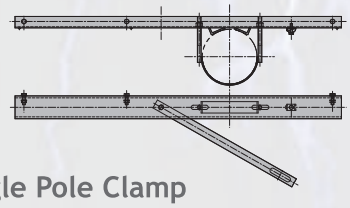

Single Pole Clamp
Part No: LLT-22/3HB

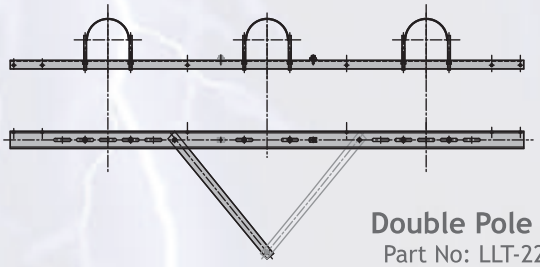

Double Pole Clamp
Part No: LLT-22/3HB2

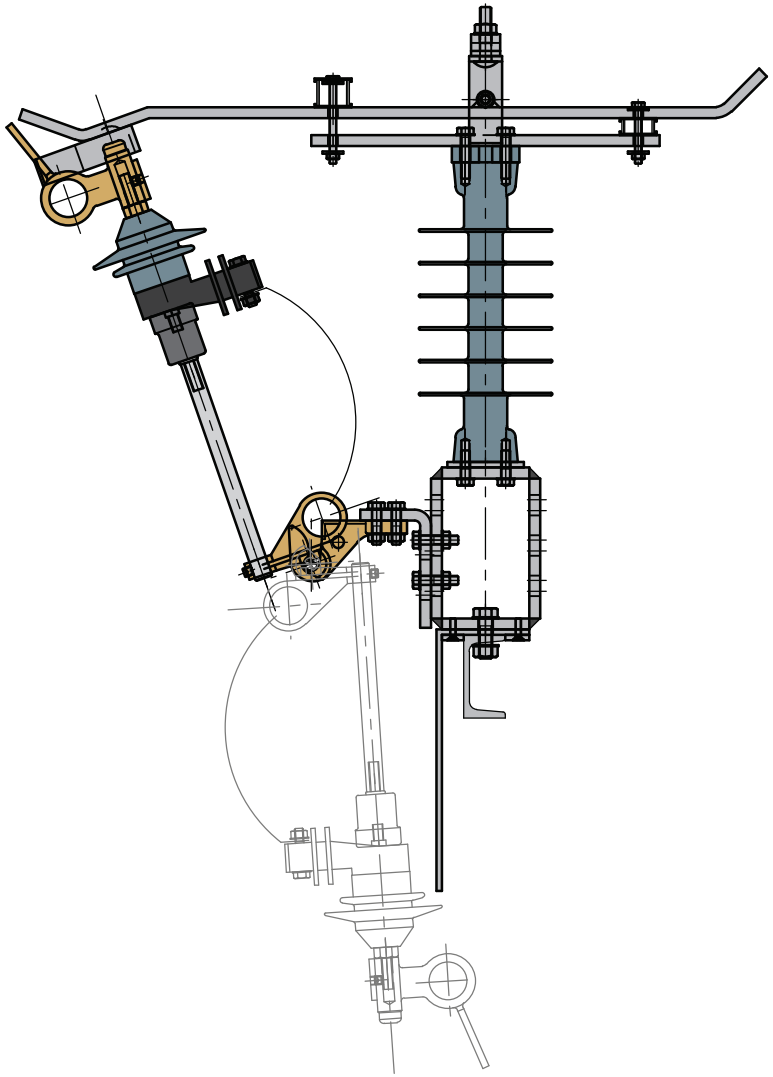

3.3kV Firewall - Rocker
Product Data Sheet

Firewall Rating	
Part Number	LLT22/95-3621
System Voltage	3.3kV
Lightning Impulse Withstand Voltage	220kV
Number of Sheds	6
Creepage	836mm
Weight	8kg
Box Dimensions	690w x 140d x 660h

Electrical and Mecanical Ratings in Accordance with IEC 282-02

Designed by AFG

DRAWING NUMBER
0926 - 01 - 00/3.3

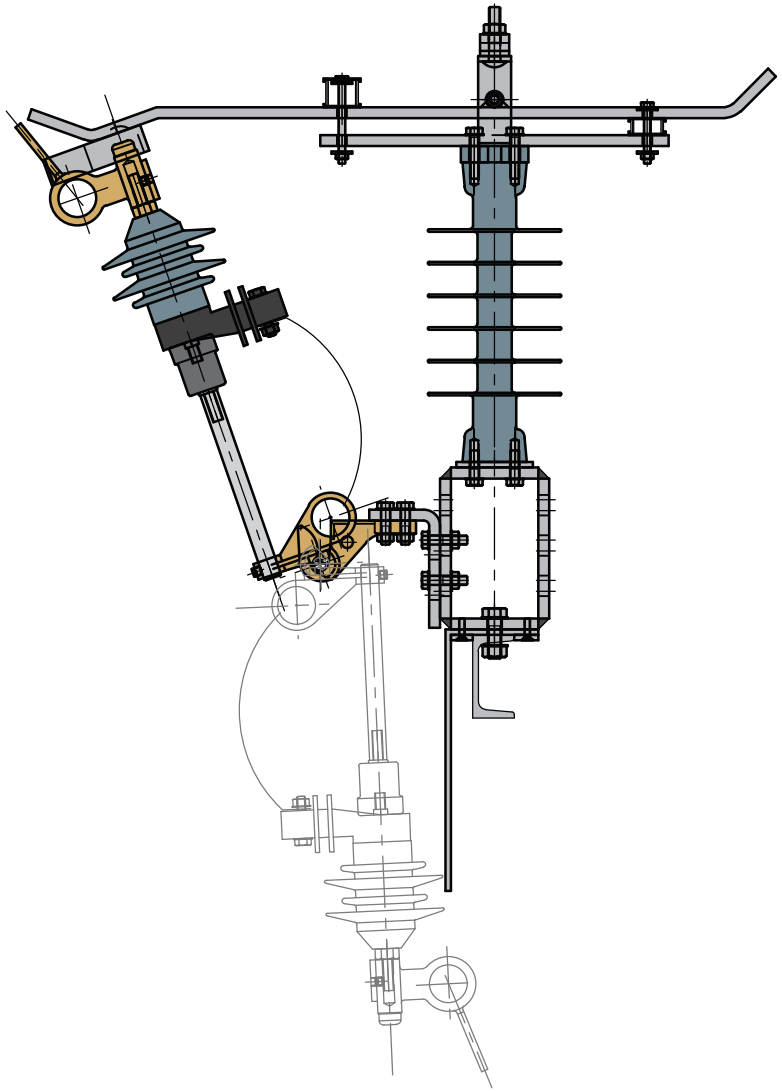

LIVE LINE TECHNOLOGY

6.6kV Firewall - Rocker Product Data Sheet

Firewall Rating	
Part Number	LLT22/95-3621
System Voltage	6.6kV
Lightning Impulse Withstand Voltage	220kV
Number of Sheds	6
Creepage	836mm
Weight	8kg
Box Dimensions	690w x 140d x 660h

Electrical and Mecanical Ratings in Accordance with IEC 282-02

Designed by AFG

DRAWING NUMBER
0926 - 01 - 00/3.3

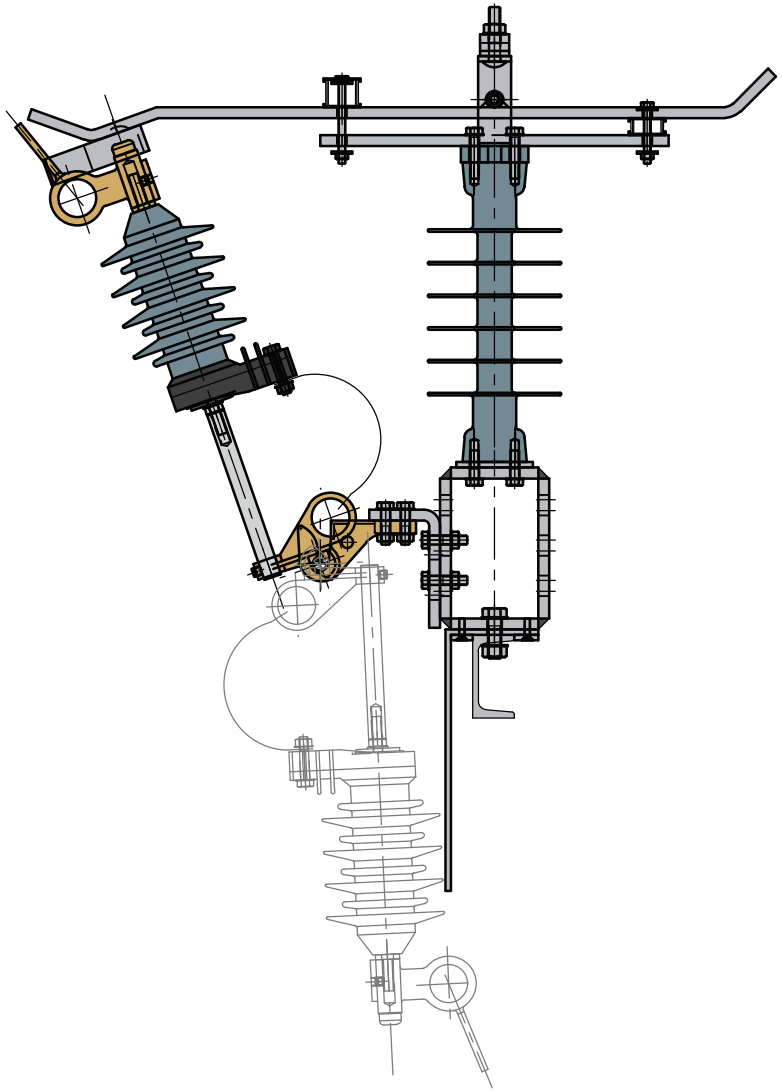

LIVE LINE TECHNOLOGY

12kV Firewall - Rocker Product Data Sheet

Firewall Rating	
Part Number	LLT22/95-3621
System Voltage	12kV
Lightning Impulse Withstand Voltage	220kV
Number of Sheds	6
Creepage	836mm
Weight	8kg
Box Dimensions	690w x 140d x 660h

Electrical and Mecanical Ratings in Accordance with IEC 282-02

Designed by AFG

DRAWING NUMBER
0926 - 01 - 00/3.3

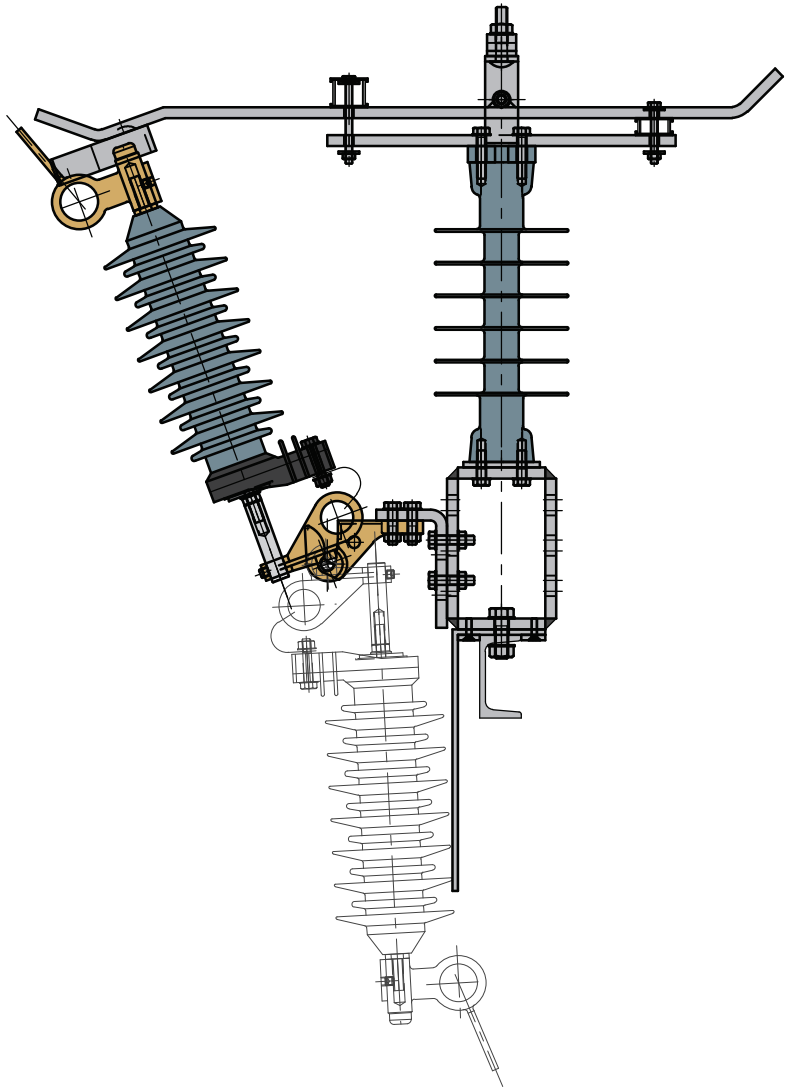

24kV Firewall - Rocker
Product Data Sheet

Firewall Rating	
Part Number	LLT22/95-3621
System Voltage	24kV
Lightning Impulse Withstand Voltage	220kV
Number of Sheds	6
Creepage	836mm
Weight	8kg
Box Dimensions	690w x 140d x 660h

Electrical and Mecanical Ratings in Accordance with IEC 282-02

Designed by AFG

DRAWING NUMBER
0926 - 02 - 00/24

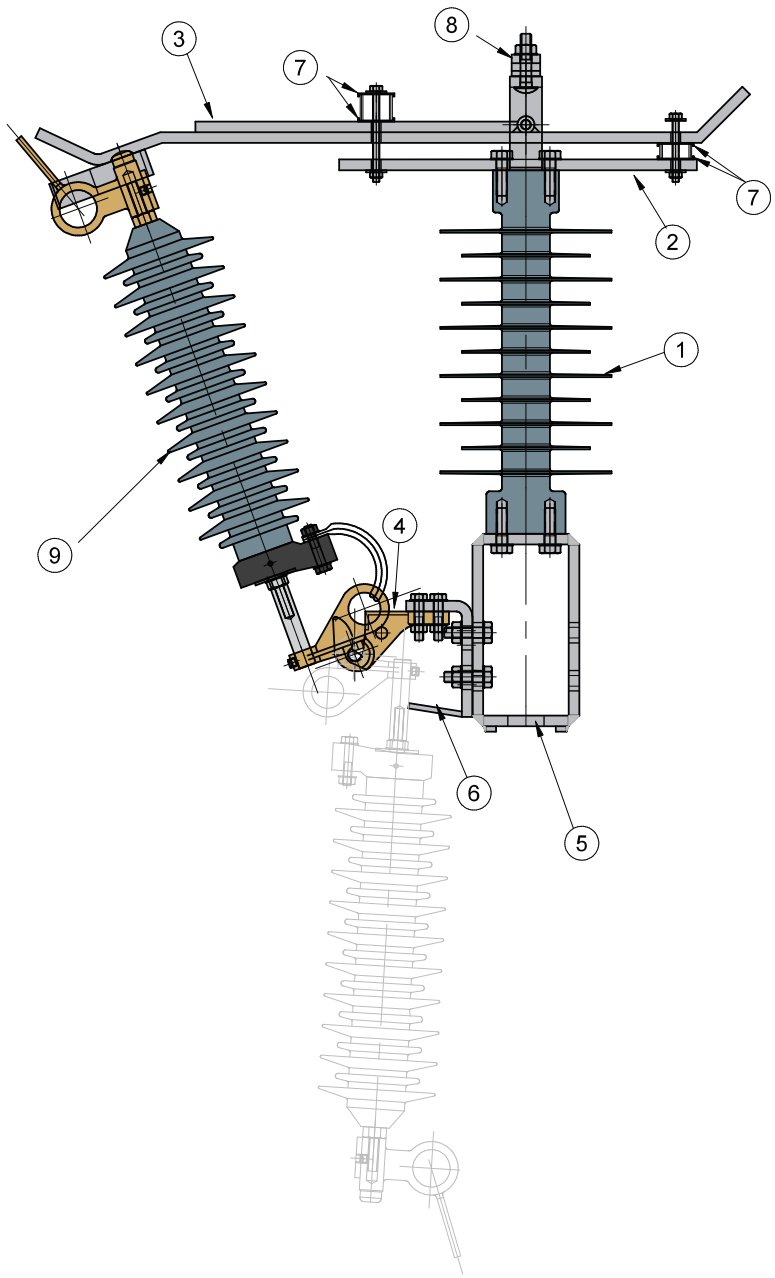

LIVE LINE TECHNOLOGY

36kV Firewall - Rocker Product Data Sheet

Firewall Rating	
Part Number	LLT22/95-3621
System Voltage	36kV
Lightning Impulse Withstand Voltage	220kV
Number of Sheds	6
Creepage	836mm
Weight	8kg
Box Dimensions	720w x 155d x 765h

Electrical and Mecanical Ratings in Accordance with IEC 282-02

Designed by AFG

DRAWING NUMBER
0926 - 07 - 00

LIVE LINE TECHNOLOGY

DRAWN K.R	08/02/2021	LIVE LINE TECHNOLOGY
CHECKED K.R		TITLE **SINGLE-POLE FIRE WALL INSTALLATION GUIDE**
QA		
MFG		
APPROVED		
		SIZE D / DWG NO FIREWALL- 03/21 / REV
		SCALE - 1:1 / SHEET 3 OF 3

Hood Firewall 3.3kV-27kV Drop Out Surge Arresters

The most common voltages are from 3.3kV, 6.6kV, 12kV, 15kV, 24kV, 27kV which fit into the drop out surge arrester firewall bracket.

The drop out surge arrester is the safest surge arrester system, with no recorded injuries to replace the surge arrester with a telescopic Link Stick.

Hood firewalls can be used on the body of overhead line equipment such as transformers, auto-reclosers and voltage regulators.

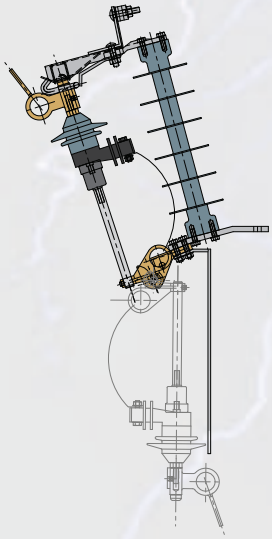

3.3kV drop out surge arrester 1.9kV MCOV Link Stick replaceable

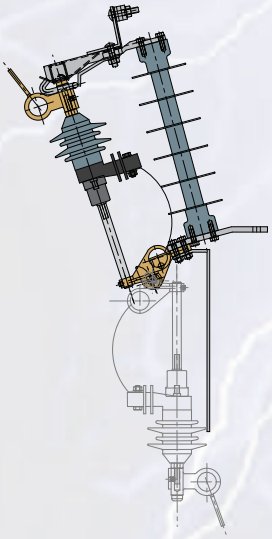

6.6kV drop out surge arrester 5.4kV MCOV Link Stick replaceable

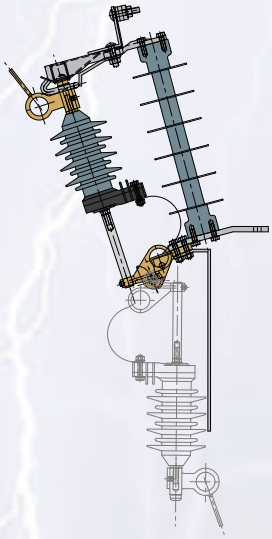

12kV drop out surge arrester 9.4kV MCOV Link Stick replaceable

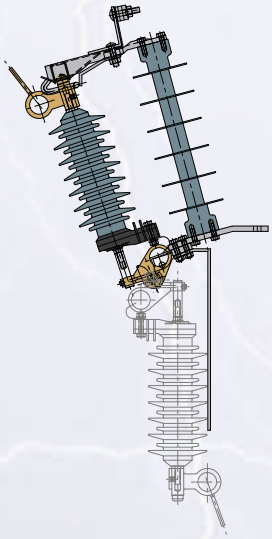

24kV drop out surge arrester 19.2kV MCOV Link Stick replaceable

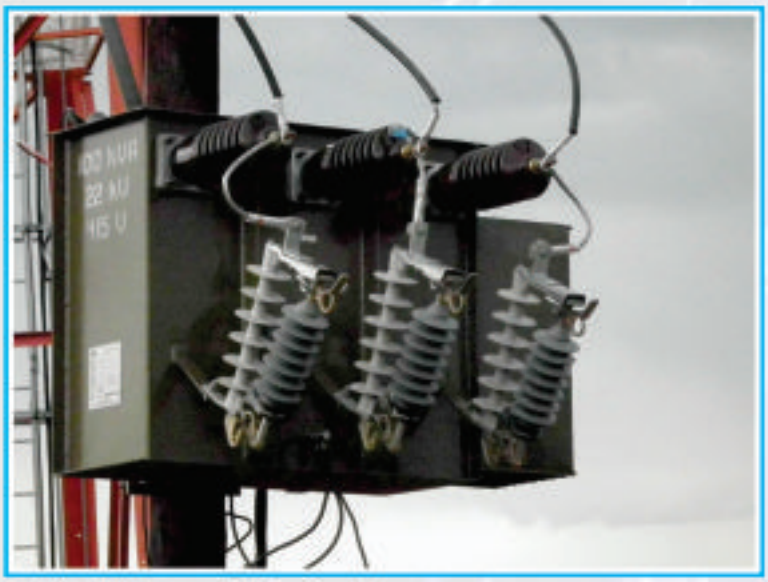

Benefits

1) Safest surge arrester in the world - technician cannot get injured by replacing the surge arrester from ground.
2) Visual indication - The drop out surge arrester will drop out only when the surge arrester expires. Not every time there is a lightning storm.
3) Reduce fault finding - should a surge arrester malfunction and SEF (SEF - sensitive earth fault), the surge arrester can easily pulled out via a hotstick or telescopic stick.
4) Improve customer service - reduce surge arrester replacement time from minutes and hours to seconds.
5) Improve probability of replacement - Eskom studies indicate drop out surge arresters are 4x times more likely to be replaced than fixed types.

Firewall Rocker 3.3kV-27kV Drop Out Surge Arresters

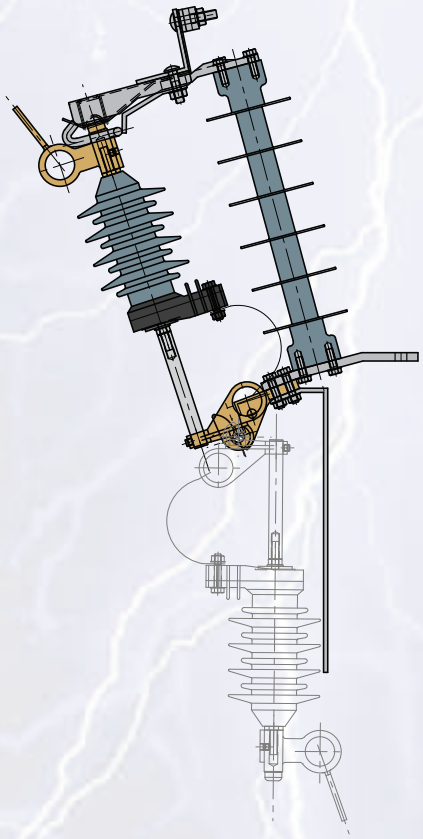

12kV Hood Firewall
Part No: LLT95/3621SM

The Firewall can be installed on power lines from 3.3kV-36kV

Rocker Arm Firewall Components

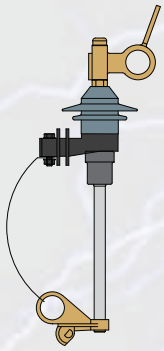

3.3kV Arrester
Part No: LLT-A3.3KC

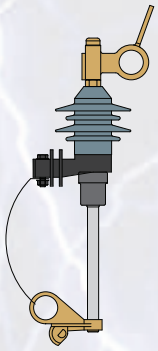

6.6kV Arrester
Part No: LLT-A6.6KC

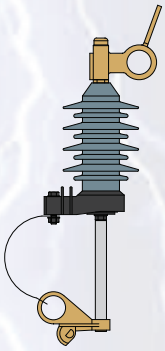

12kV
Part No: LLT-A12KC

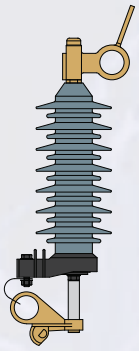

24kV
Part No: LLT-A24KC

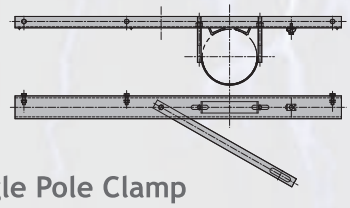

Single Pole Clamp
Part No: LLT-22/3HB

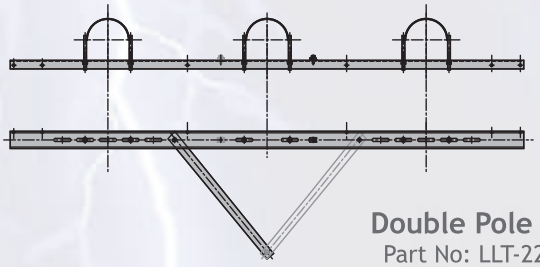

Double Pole Clamp
Part No: LLT-22/3HB2

Advantages of the Hood Firewall Installation

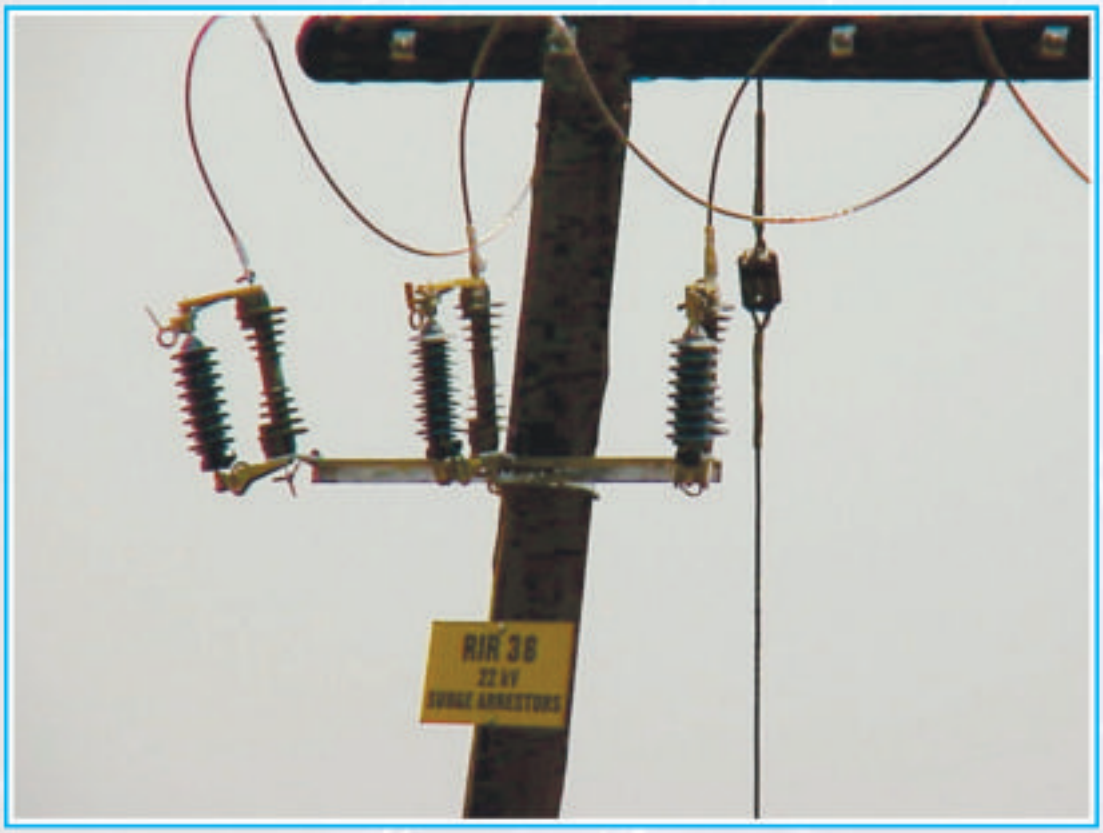

1. Changed Live Line
2. Changed from ground
3. Easily identified when blown
4. Safer
5. Easier maintenance
6. Easy & effective replacement
7. Elimination of outage times
8. Cost Effective method of protecting an area
9. Arrester can effectively be opened when there are problematic arresters or GLD's
10. Easy isolation during fault finding
11. Operational staff relieved of dangerous situations
12. Operational staff response to arrester maintenance improved
13. On the spot replacement
14. Building up staff of attitudes by providing easier maintenance of arrester unit
15. Fear factor of operational staff removed when working on high voltage equipment
16. Line inspections a pleasure
17. Spent arrester easily noticed for replacement from previous lightning incident
18. Risk of equipment exposure eliminated
19. Faulty units immediately replaced, no postponing of the maintenance effort
20. Used at distribution line ends and T-offs (voltage doubling points)

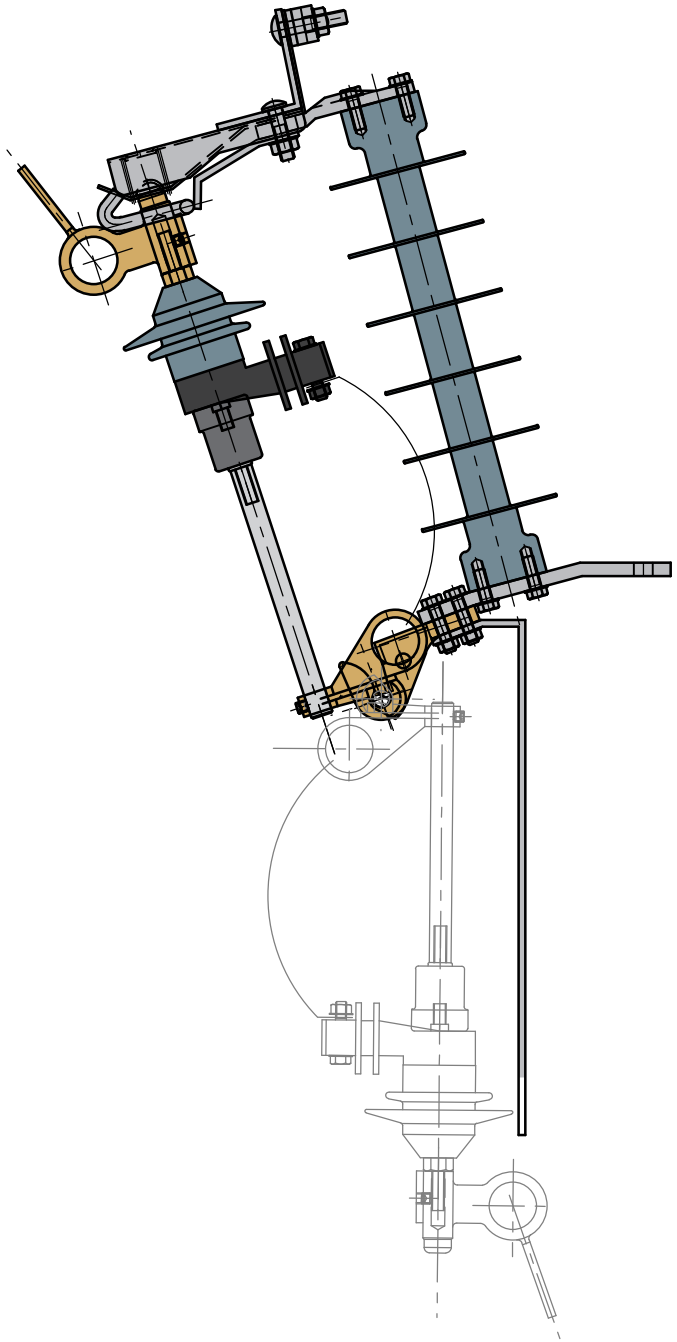

LIVE LINE TECHNOLOGY

3.3 kV Firewall - Hood Product Data Sheet

3.3 kV Firewall Rating	
Part Number	LLT22/95-3621SM
Operating Voltage	3.3kV
MCOV	2.55kV
Creepage	747mm
Type	Class 1
Number of Sheds	6
Weight	1kg
Box Dimensions	690w x 140d x 660h

Electrical and Mecanical Ratings in Accordance with IEC 282-02

Designed by AFG

DRAWING NUMBER
0926 - 19 - 00/3.3

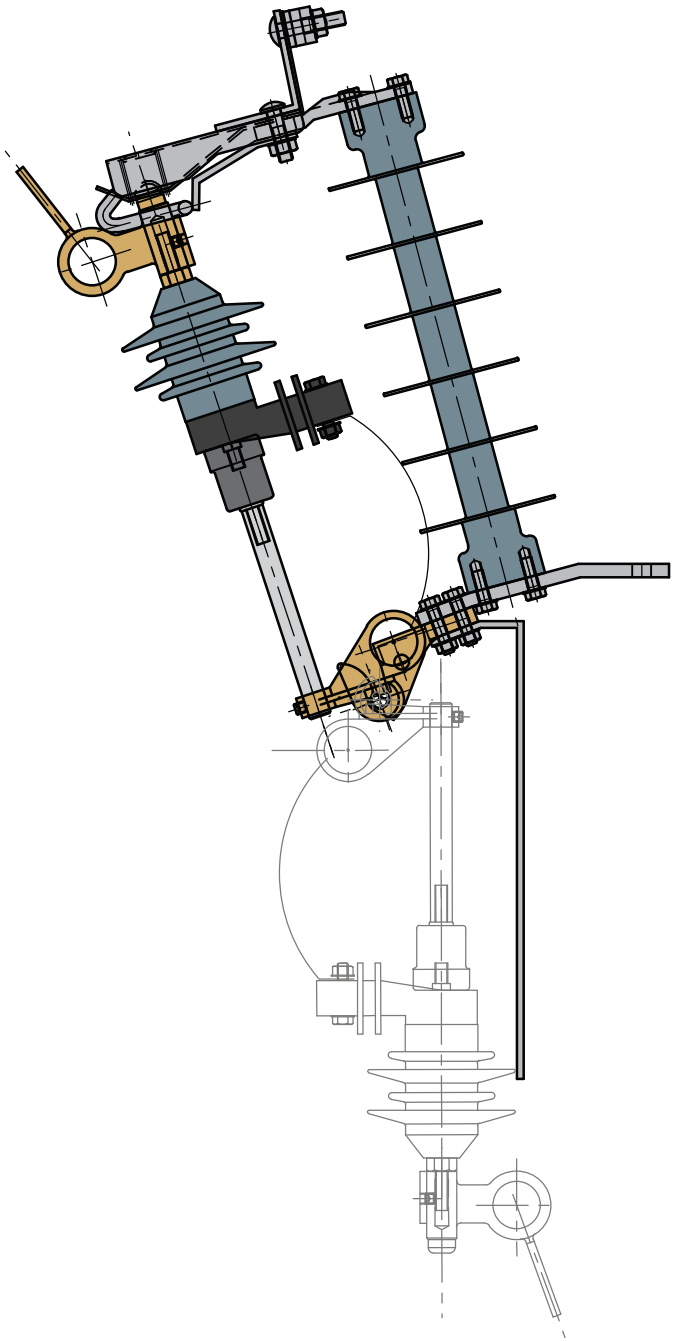

LIVE LINE TECHNOLOGY

6.6kV Firewall - Hood
Product Data Sheet

6.6kV Firewall Rating	
Part Number	LLT22/95-3621SM
Operating Voltage	6.6kV
MCOV	5.1kV
Creepage	747mm
Type	Class 1
Number of Sheds	6
Weight	1kg
Box Dimensions	690w x 140d x 660h

Electrical and Mecanical Ratings in Accordance with IEC 282-02

Designed by AFG

DRAWING NUMBER
0926 - 19 - 00/6.6

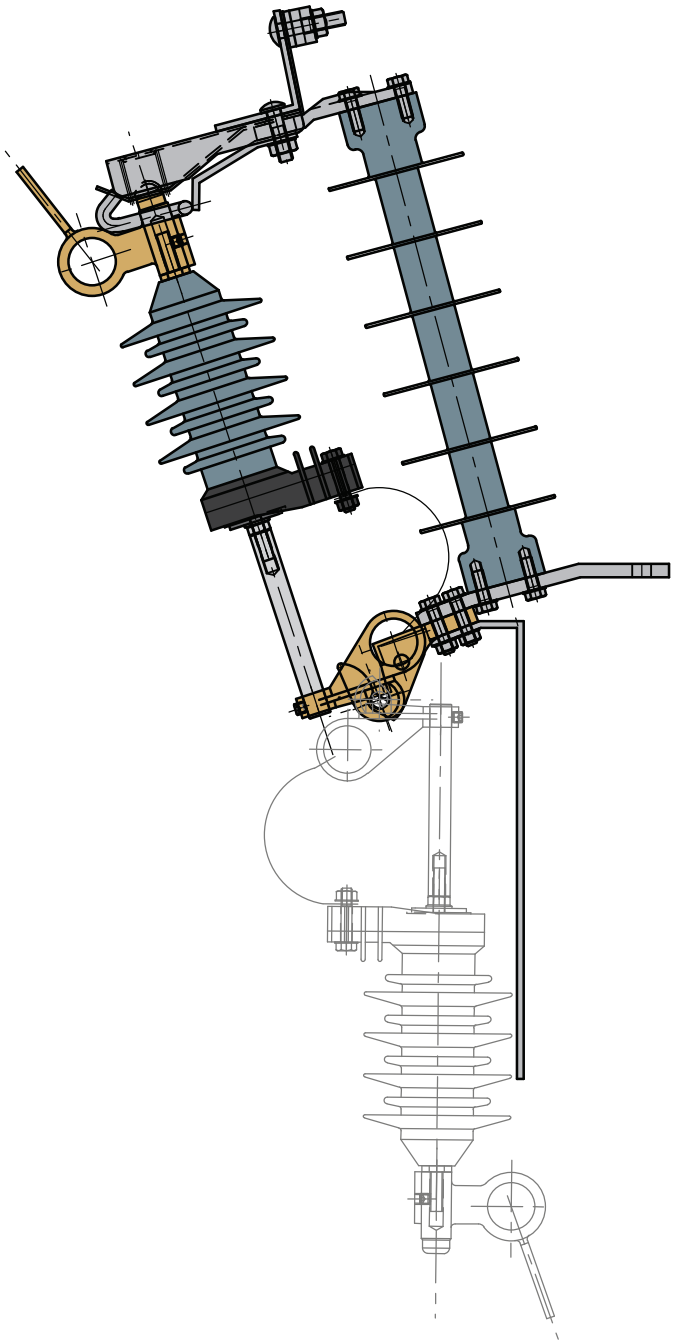

12kV Firewall - Hood
Product Data Sheet

12kV Firewall Rating	
Part Number	LLT22/95-3621SM
Operating Voltage	12kV
MCOV	10.2kV
Creepage	747mm
Type	Class 1
Number of Sheds	6
Weight	1kg
Box Dimensions	690w x 140d x 660h

Electrical and Mecanical Ratings in Accordance with IEC 282-02

Designed by AFG

DRAWING NUMBER
0926 - 19 - 00/12

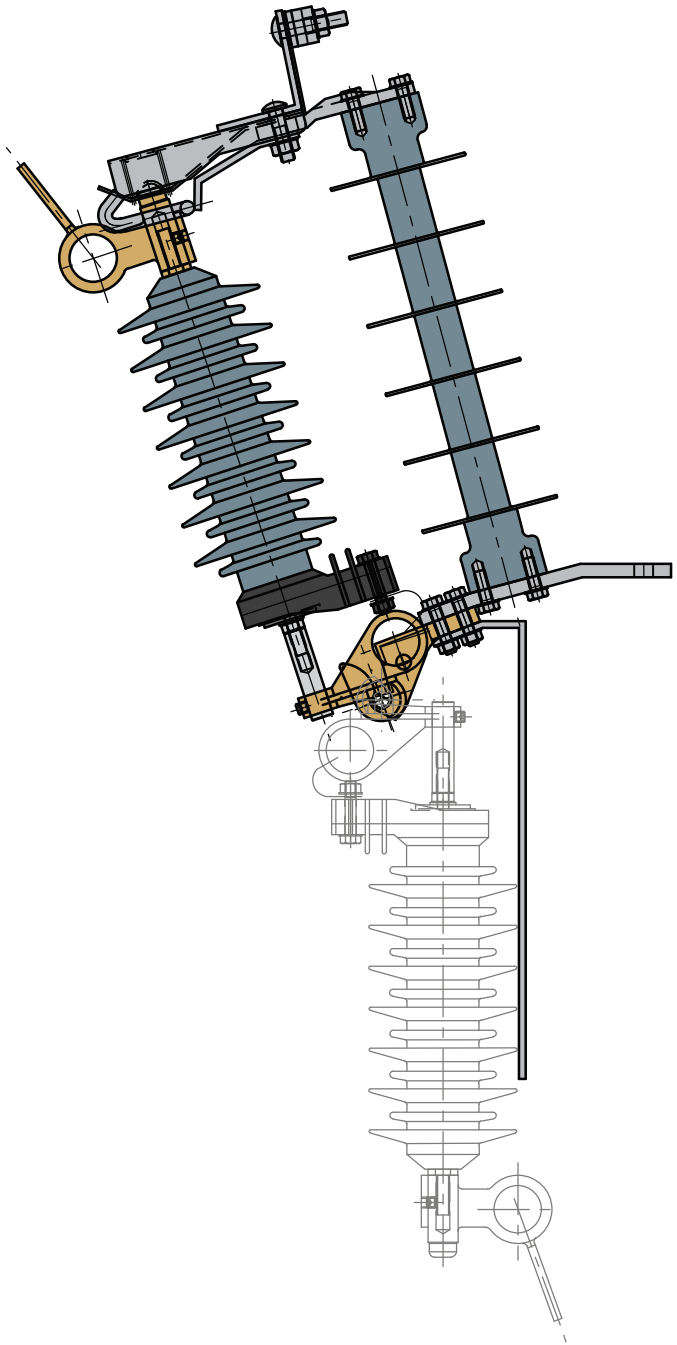

24kV Firewall - Hood
Product Data Sheet

24kV Firewall Rating	
Part Number	LLT22/95-3621SM
Operating Voltage	24kV
MCOV	19.5kV
Creepage	747mm
Type	Class 1
Number of Sheds	6
Weight	1kg
Box Dimensions	690w x 140d x 660h

Electrical and Mecanical Ratings in Accordance with IEC 282-02

Designed by AFG

DRAWING NUMBER
0926 - 19 - 00/24

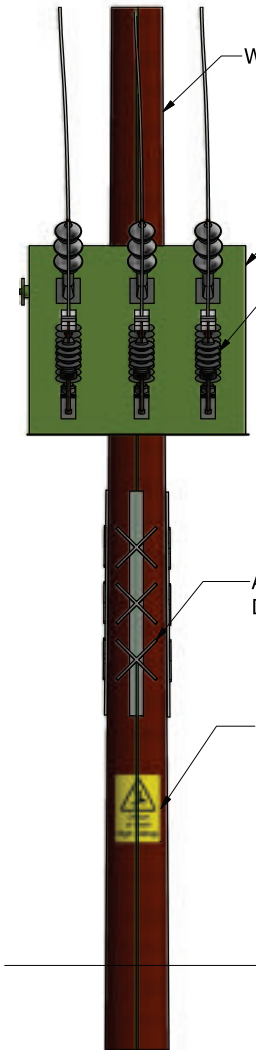

FRONT VIEW

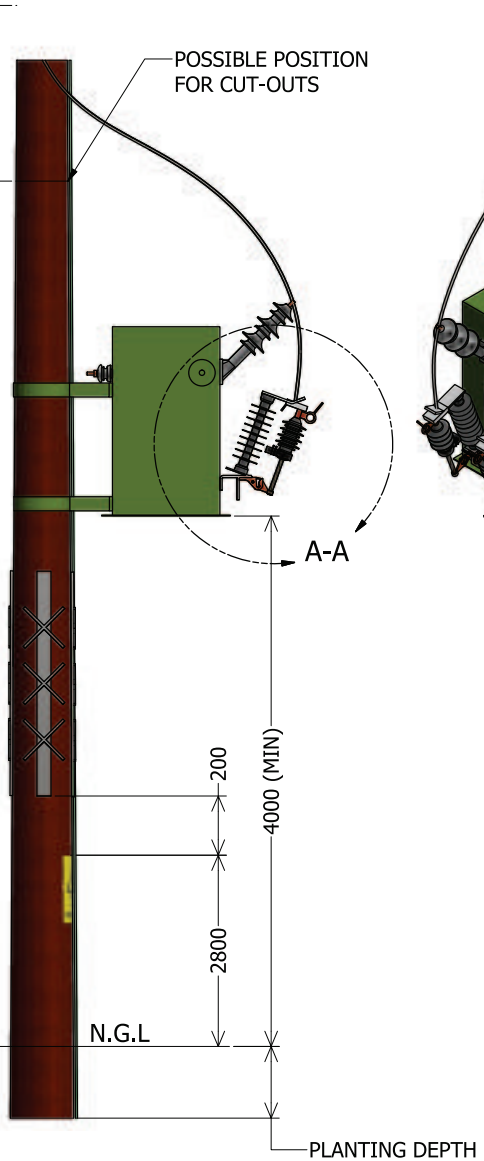

SIDE VIEW

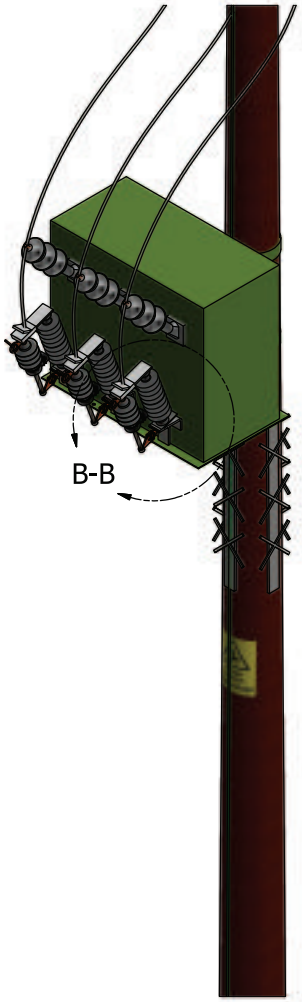

ISOMETRIC VIEW

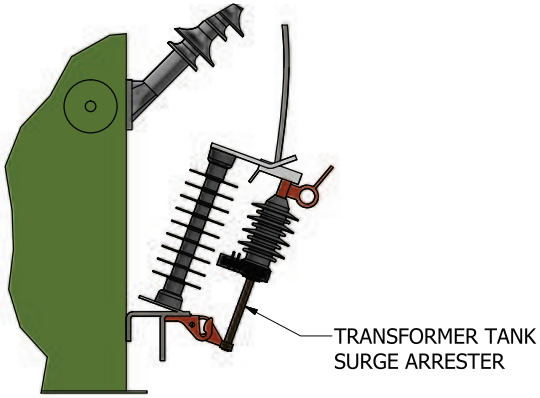

DETAIL A-A

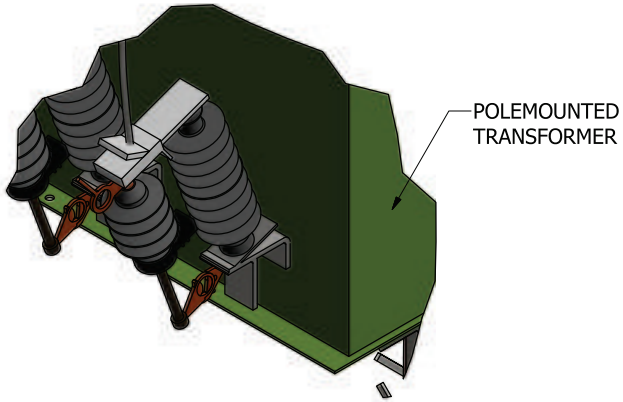

DETAIL B-B

NOTE:
1. BOND TRANSFORMER SURGE ARRESTER TO TRANSFORMER TANK.
2. USE 16-35mm SQ. COPPER OR EQUIVALENT FOR GROUNDING BY CROWFOOT EARTH.
3. SUITABLE FOR TRANSFORMERS UPTO 100kVA.
4. JUMPERS TO BE COVEREDCONDUCTORS.

LIVE LINE TECHNOLOGY

DRAWN K.R	31/10/2021	LIVE LINE TECHNOLOGY www.liveline.co.za
CHECKED K.R	31/10/2021	TITLE
QA		TRANSFORMER TANK SURGE ARRESTER INSTALLATION STANDARD
MFG		
APPROVED KEVIN RISI		
Tel: +27184685080		SIZE D / DWG NO TX ARRESTER 009/21 / REV
sales@liveline.co.za		SCALE - 1:1 / SHEET 1 OF 2

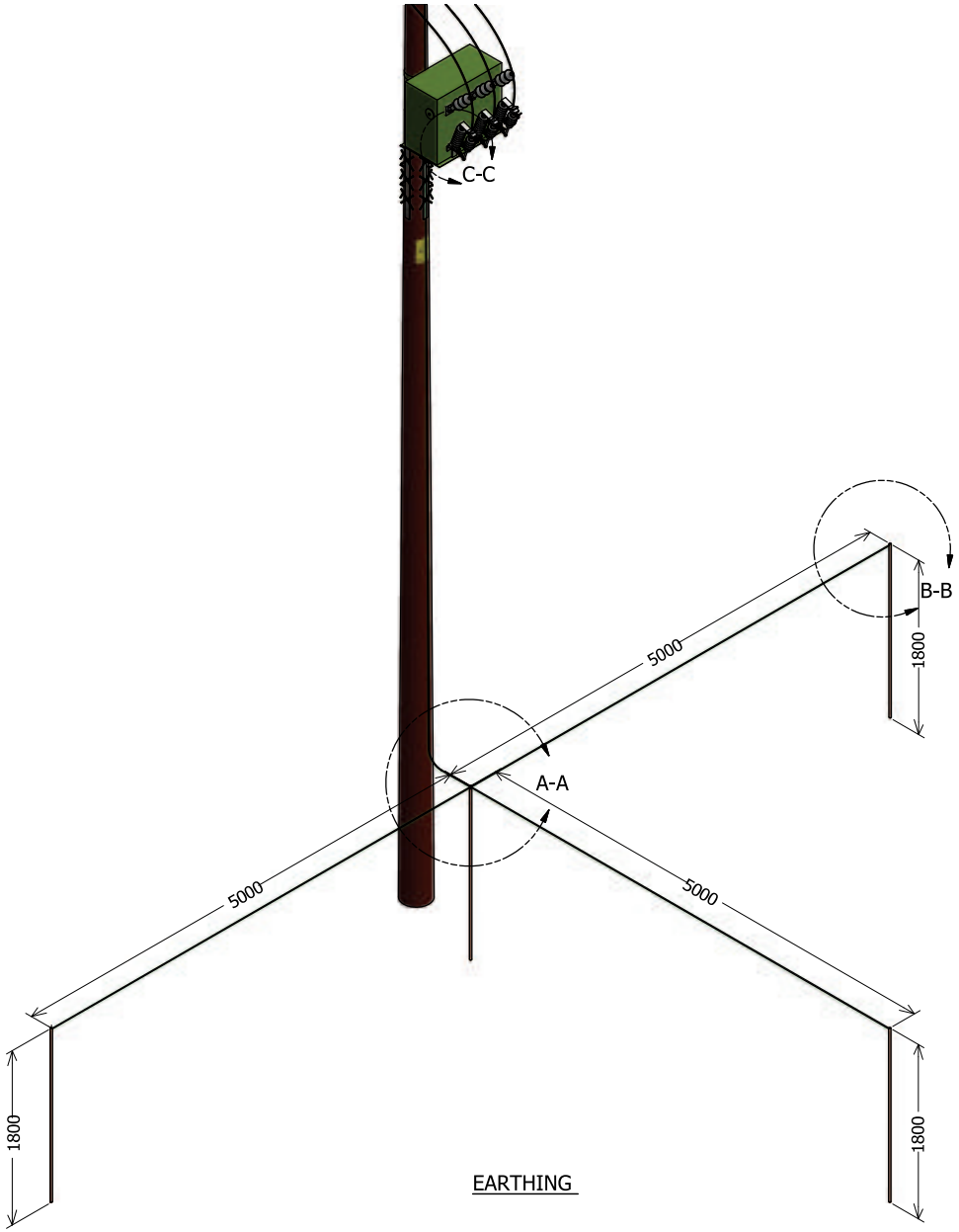

EARTHING

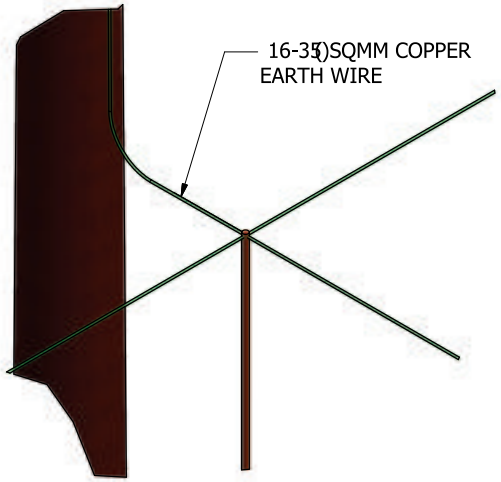

DETAIL A-A

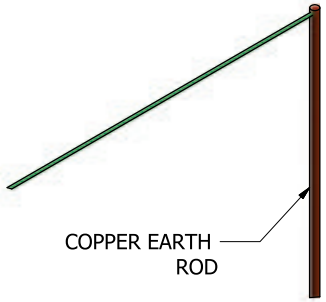

DETAIL B-B

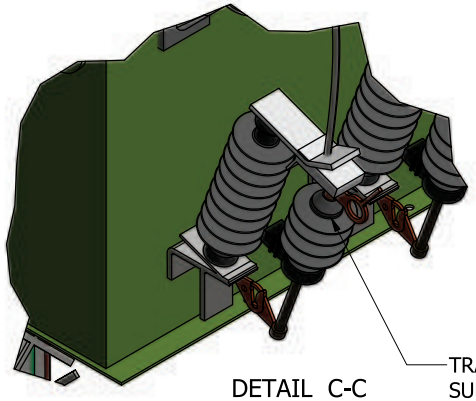

DETAIL C-C

NOTE:
1. BOND TRANSFORMER TANK SURGE ARRESTER TO TRANSFORMER TANK.
2. USE 16-35mm SQ. COPPER OR EQUIVALENT FOR GROUNDING BY CROWFOOT EARTH.

LIVE LINE TECHNOLOGY	DRAWN K.R 31/10/2021	LIVE LINE TECHNOLOGY www.liveline.co.za	
	CHECKED K.R 31/10/2021	TITLE TRANSFORMER TANK SURGE ARRESTER EARTHING DETAIL INSTALLATION STANDARD	
	QA		
	MFG		
	APPROVED KEVIN RISI	SIZE D	DWG NO TX ARRESTER 009/21 REV
	Tel: +27184685080	SCALE - 1:1	SHEET 2 OF 2
	sales@liveline.co.za		

Utility 9 Step Technology Integration Process

1. Live Line Technology Presentation to Utility
2. Live Line Technology gives a free pilot unit and installation training
3. Pilot report review by Utility and Live Line Technology
4. Utility expands pilot
5. Utility creates Specification
6. Utility prepares for procurement
   - Budget
   - Single source verification
   - Tender
7. Order
8. Delivery and Payment
9. Cost savings become a reality for the Utility

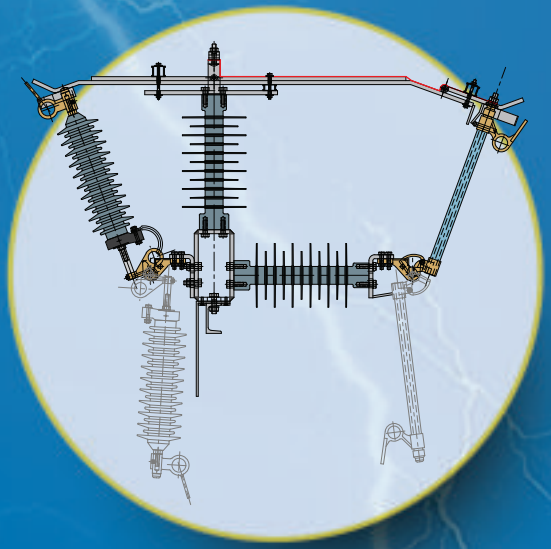

Combi Unit

Rocker Arm Firewall

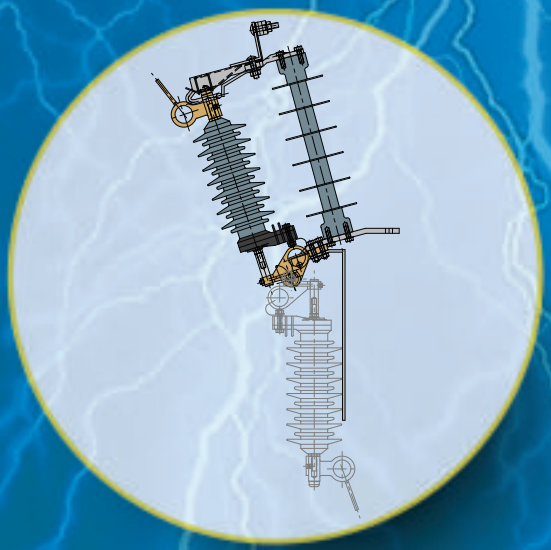

Hood Firewall

LIVE LINE
TECHNOLOGY

AFRICA

Live Line Technology
51 Connie Street, Adamayview, South Africa
Tel: +27 18 468 5080
Kevin Risi: +27 84 701 3354
Email: sales@liveline.co.za
Web: www.liveline.co.za

BRAZIL

Live Line Technology Brazil
Rio de Janeiro
Gabriel Gandra de Carvalho: +55 21 982 941 141
Email: contato@livelinetechnology.com

REVISION 6